ARROW EXHAUST

PRODOTTO INTERAMENTE IN ITALIA

PRODUCT CATALOGUE N° 032

APRIL 2014

KEY

European Homologation
directive 97/24/EC ch.5
(measures to be taken against air pollution caused by 2 or 3 wheel motor vehicles)

European Homologation
directive 97/24/EC ch.9
(permissible sound level and exhaust system for 2 or 2 wheel motor vehicles)

NOTE Homologation certificates are valid for specified vehicle types only.

Meets **2006/120/CE** European Directive standards
(**97/24/CE cap. 9 + cap.5** European Directive upgrade)

NOTE European standards **2006/120/CE** are met only if the original catalytic converter is not removed when fitting an **97/24/CE ch. 9** approved Arrow silencer, or if you fit an Arrow exhaust system with an approved (as **97/24/CE ch. 5** standard) catalytic converter

RACING Not street legal
(for closed circuit use only)

Fitment - The continuos line means that it is necessary to fit all the components

Option for fitment - The dotted line means that it is not needed to fit all the components

1

Round-Sil

2

Round-Sil
Pro-Race

3

Street Thunder
Off-Road Thunder

4
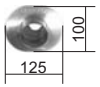

Indy Race

5

Mini Thunder

7
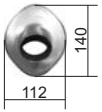

Maxi Race-Tech

8
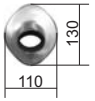

Race-Tech

9
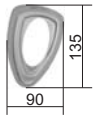

Trophy

10

Pro-Racing

INDEX

CATALOGUE WITH PICTURES (LISTED BY BRAND) ..... Page 2..151
- APRILIA ..... Page 2
- BAJAJ ..... Page 8
- BENELLI ..... Page 9
- BETA ..... Page 10
- BMW ..... Page 10
- DERBI ..... Page 21
- DUCATI ..... Page 22
- FANTIC ..... Page 34
- GAS GAS ..... Page 35
- GILERA ..... Page 36
- HONDA ..... Page 37
- HYOSUNG ..... Page 69
- HUSQVARNA ..... Page 70
- KAWASAKI ..... Page 77
- KEEWAY ..... Page 93
- KTM ..... Page 94
- KYMCO ..... Page 105
- MOTO GUZZI ..... Page 105
- MV AGUSTA ..... Page 106
- PEUGEOT ..... Page 110
- SHERCO ..... Page 111
- SUZUKI ..... Page 112
- TRIUMPH ..... Page 129
- YAMAHA ..... Page 130

ENDURO 4T ..... Page 152
STREET 2T ..... Page 154
ENDURO 2T ..... Page 156
SCOOTER MAXI ..... Page 159
SCOOTER 50cc. ..... Page 163
UNIVERSAL SILENCERS ..... Page 169
ACCESSORIS & DB-KILLER ..... Page 170
CLOTHING LINE & DISPLAYS ..... Page 171

Aprilia

SR 125 Motard '12/13

9e5 2006/120/CE

VEHICLE TYPE: **M70 var. 3 ver. 00**

RACING COLLECTORS
53041MI

HOMOLOGATED CATALYST
11016KZ

3

3

STREET THUNDER STEEL END CAP

	HOMOL.
ALUMINIUM	53502A0
ALUMINIUM "DARK"	53502A0N

STREET THUNDER CARBON END CAP

	HOMOL.
TITANIUM	53502PK
ALUMINIUM	53502AK
ALUMINIUM "DARK"	53502AKN

Aprilia

RS4 125 '11/14

9e5 2006/120/CE

VEHICLE TYPE: **TW var. 0 ver. 00**

THUNDER ALUMINIUM HOMOLOGATED
51509A0

HOMOLOGATED CATALYST
11013KZ

Aprilia *SX-V 4.5 '07/14*

RACING *FULL TITANIUM SILENCER*
75078TT*

TITANIUM COLLECTORS
72086PD

⚠ * **SILENCER ALSO FITS TO «VAN DEN BOSCH REPLICA» COLLECTORS**

Aprilia *SX-V 5.5 '07/14*

RACING *FULL TITANIUM SILENCERS*
75079TT*

TITANIUM COLLECTORS
72086PD

⚠ * **SILENCER ALSO FITS TO «VAN DEN BOSCH REPLICA» COLLECTORS**

Aprilia *SX-V 4.5 / 5.5 '07/14*

RACING
FULL SYSTEM MX COMPETITION "FULL TITANIUM"
75110TK

3

Aprilia

MX-V 4.5 '09/14

RACING

FULL SYSTEM
MX COMPETITION
"FULL TITANIUM"
75108TK

3

Aprilia

PEGASO 650 / R Factory / Trail '05/11

VEHICLE TYPE: **VD var. 0 ver. 00 / VD var. B ver. 00 / VD var. E ver. 00 / VD var. D ver. 00**

3

STREET THUNDER
STEEL END CAP

	HOMOL.
TITANIUM	72608PO
ALUMINIUM	72608AO

SILENCERS FOR ORIGINAL COLLECTORS

Aprilia

SHIVER 750 '08/09

VEHICLE TYPE: **RA var. 0 ver. 00**

9e5 2006/120/CE

1 : 2 LINK PIPE
71410MI*

NON CATALYZED CENTRAL LINK PIPE
71411MI#

3

STREET THUNDER HOMOLOGATED SILENCERS

9	CARBON CAP	STEEL CAP
TITANIUM	71748PK	
ALUMINIUM	71748AK	71748AO
ALUMINIUM "DARK"	71748AKN	71748AON

⚠ * **71410MI LINK PIPE ALSO FITS TO ORIGINAL CATALYZED LINK PIPE**

⚠ # **71411MI LINK PIPE ALSO FITS TO ORIGINAL SILENCER**

Aprilia

SHIVER 750 '10/14

VEHICLE TYPE: **RA var. E ver. 00 / 01**

9e5 2006/120/CE

1 : 2 LINK PIPE
71437MI*

NON CATALYZED CENTRAL LINK PIPE
71411MI#

3

STREET THUNDER HOMOLOGATED SILENCERS

9	CARBON CAP	STEEL CAP
TITANIUM	71748PK	
ALUMINIUM	71748AK	71748AO
ALUMINIUM "DARK"	71748AKN	71748AON

⚠ * **71437MI LINK PIPE ALSO FITS TO ORIGINAL CATALYZED LINK PIPE**

⚠ # **71411MI LINK PIPE ALSO FITS TO ORIGINAL SILENCER**

Aprilia

SRV 850 '12/13

VEHICLE TYPE: **M55 var. 1 ver. 03**

9e5 2006/120/CE

RACING COLLECTORS
71469MI*

HOMOLOGATED CATALYZED COLLECTORS
71469KZ*

8

8

RACE-TECH CARBON END CAP

	9 HOMOL.
TITANIUM	71749PKK
ALUMINIUM	71749AK
ALUMINIUM "DARK"	71749AKN

RACE-TECH STEEL END CAP

	9 HOMOL.
ALUMINIUM	71749AO
ALUMINIUM "DARK"	71749AON

⚠ * **SYSTEM NOT TO BE FITTED WITH CENTRAL STAND**

Aprilia

TUONO 1000 R - TUONO 1000 R Factory '06/10

VEHICLE TYPE: **RR var. L ver. 00 / RR var.1 ver.00**

RACING COLLECTORS
71273MI

8

RACE-TECH STEEL END CAP

	9 HOMOL.
TITANIUM	71677PO*
CARBON FIBRE	71677MO*
ALUMINIUM	71677AO*
ALUMINIUM "DARK"	71677AON*

⚠ * **SILENCERS ALSO FIT TO ORIGINAL COLLECTORS**

Aprilia

RSV 1000 R - RSV 1000 R Factory '04/08

VEHICLE TYPE: **RR var. O ver. OO / RR var. K ver. OO**

RACING COLLECTORS
71273MI

8

RACE-TECH STEEL END CAP

	HOMOL.
TITANIUM	71677PO*
CARBON FIBRE	71677MO*
ALUMINIUM	71677AO*
ALUMINIUM "DARK"	71677AON*

⚠ * **SILENCERS ALSO FIT TO ORIGINAL COLLECTORS**

Aprilia

TUONO V4 R - TUONO V4 R APRC '11/13

VEHICLE TYPE: **TY var. O ver. OO**

9e5 2006/120/CE

LINK PIPE FOR ORIGINAL COLLECTORS
71406MI

8

RACE-TECH CARBON END CAP

	HOMOL.
TITANIUM	71744PK
CARBON FIBRE	71744MK
ALUMINIUM	71744AK
ALUMINIUM "DARK"	71744AKN

HOMOLOGATED CATALYZED LINK PIPE FOR ORIGINAL COLLECTORS
71406KZ

dB-KILLER FOR GP2 SILENCER
11009DB

2

GP2 SILENCER

	RACING
FULL TITANIUM	71009GP

SILENCERS FOR ORIGINAL COLLECTORS

Aprilia

RSV 4 - RSV 4 Factory '09/13

9e5 2006/120/CE

VEHICLE TYPE: **RK var. 0 ver. 00**
RK var. A ver. 00
RK var. B ver. 00

LINK PIPE FOR ORIGINAL COLLECTORS
71406MI

HOMOLOGATED CATALYZED LINK PIPE FOR ORIGINAL COLLECTORS
71406KZ

dB-KILLER FOR GP2 SILENCER
11009DB

8

2

RACE-TECH CARBON END CAP

	9 HOMOL.
TITANIUM	71744PK
CARBON FIBRE	71744MK
ALUMINIUM	71744AK
ALUMINIUM "DARK"	71744AKN

GP2 SILENCER

	RACING
FULL TITANIUM	71009GP

SILENCERS FOR ORIGINAL COLLECTORS

Bajaj

Pulsar 200 NS '12/14

LINK PIPE FOR ORIGINAL COLLECTOR
71493MI

2

3

3

PRO-RACE STEEL END CAP

	RACING
NICHROM	71308PRI

THUNDER STEEL CAP

	RACING
ALUMINIUM	71308AO
ALUMINIUM "DARK"	71308AON

THUNDER CARBON CAP

	RACING
TITANIUM	71308PK
ALUMINIUM	71308AK
ALUMINIUM "DARK"	71308AKN

Benelli

BN 600 R '13/14

VEHICLE TYPE: **P25 var. 0 ver. 1**

9e5 2006/120/CE

RACING COLLECTORS
71603MI*

NON CATALYZED CENTRAL LINK PIPE
71602MI*

3

STREET THUNDER CARBON END CAP

	9 HOMOL.
TITANIUM	71814PK*
ALUMINIUM	71814AK*
ALUMINIUM "DARK"	71814AKN*

⚠ * **ALL THE COMPONENTS ARE INTERCHANGEABLE WITH THE ORIGINAL ONES**

Benelli

TRE 1130 K '06/14

VEHICLE TYPE: **TK var. 00 ver. 01**

9e5 2006/120/CE

NON CATALYZED CENTRAL LINK PIPE
71604MI*

7

MAXI RACE-TECH CARBON END CAP

	9 HOMOL.
TITANIUM	71815PK

⚠ * **ALL THE COMPONENTS ARE INTERCHANGEABLE WITH THE ORIGINAL ONES**

Beta

RR 350 '11/14 - RR 400 / 450 / 520 '10/14

3

RACING *THUNDER TITANIUM*
75089TK*

TITANIUM COLLECTOR
72088PD*

*** ALL THE COMPONENTS ARE INTERCHANGEABLE WITH THE ORIGINAL ONES**

B M W

G 450 X '08/12

3

RACING *THUNDER TITANIUM*
72017TK*

3

RACING *OFF-ROAD V2*
72017TAK*

3

RACING *THUNDER ALUMINIUM*
72017TA*

SILENCERS FOR ORIGINAL COLLECTOR

RACING

FULL SYSTEM
MX COMPETITION
"FULL TITANIUM"
72018TK*

3

*** ALL SYSTEMS REQUIRE TO REMOVE REAR INDICATOR LIGHTS**

B M W

C 600 Sport '12/14

VEHICLE TYPE: **C65 var. 0131 ver. A**

9 e 5 2006/120/CE

RACING COLLECTORS
73004MI*

8

8

RACE-TECH
STEEL END CAP

	9 HOMOL.
ALUMINIUM	**73504AO***
ALUMINIUM "DARK"	**73504AON***

RACE-TECH
CARBON END CAP

	9 HOMOL.
TITANIUM	**73504PK***
ALUMINIUM	**73504AK***
ALUMINIUM "DARK"	**73504AKN***

*** ALL THE COMPONENTS ARE INTERCHANGEABLE WITH THE ORIGINAL ONES**

B M W

C 650 GT '12/14

VEHICLE TYPE: **C65 var. 0133 ver. A**

9 e 5 2006/120/CE

RACING COLLECTORS
73008MI*

8

RACE-TECH
CARBON END CAP

	9 HOMOL.
TITANIUM	**73508PK***
ALUMINIUM	**73508AK***
ALUMINIUM "DARK"	**73508AKN***

*** ALL THE COMPONENTS ARE INTERCHANGEABLE WITH THE ORIGINAL ONES**

B M W

G 650 GS / G 650 GS Sertao '11/14

9e5 2006/120/CE

VEHICLE TYPE: **E650G var. 0188 ver. A**
E650G var. 0136 ver. A

HOMOLOGATED CATALYST
11010KZ

LINK PIPE FOR ORIGINAL COLLECTORS
71453MI

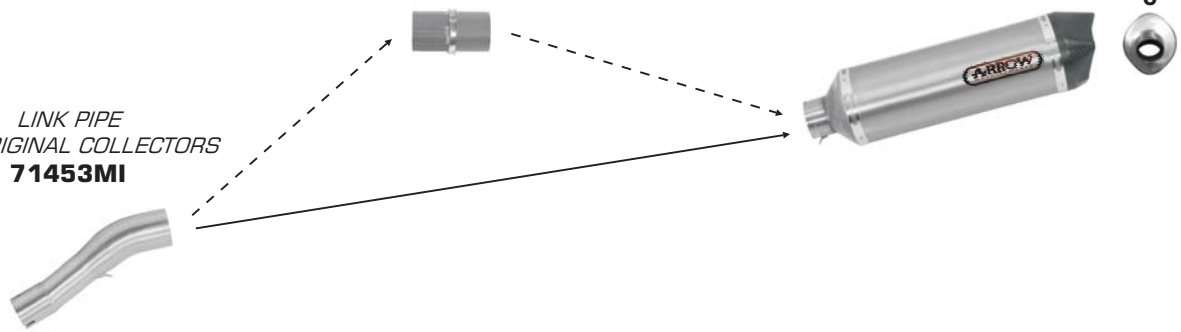

RACE-TECH CARBON END CAP

	HOMOL.
TITANIUM	72615PK
CARBON FIBRE	72615MK
ALUMINIUM	72615AK
ALUMINIUM "DARK"	72615AKN

B M W

F 650 GS '08/12

9e5 2006/120/CE

VEHICLE TYPE: **E8GS var. 0218 ver. A**

MAXI RACE-TECH CARBON END CAP

	HOMOL.
TITANIUM	72612PK
ALUMINIUM	72612AK
ALUMINIUM "DARK"	72612AKN

SILENCERS FOR ORIGINAL COLLECTORS

B M W

F 700 GS '12/14

VEHICLE TYPE: **E8GS var. 0801 ver. A**

9 e 5 2006/120/CE

RACING COLLECTORS
71479MI

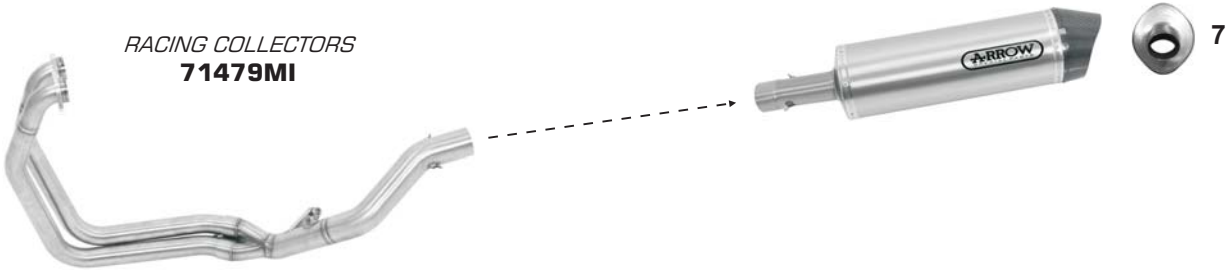

MAXI RACE-TECH CARBON END CAP

	9 HOMOL.
TITANIUM	72617PK*
ALUMINIUM	72617AK*
ALUMINIUM "DARK"	72617AKN*

⚠ * **SILENCERS ALSO FIT TO ORIGINAL COLLECTORS**

B M W

F 800 GS '08/14 - F 800 GS Adventure '13/14

VEHICLE TYPE: **E8GS var. 0219 ver. A**

9 e 5 2006/120/CE

RACING COLLECTORS
71407MI

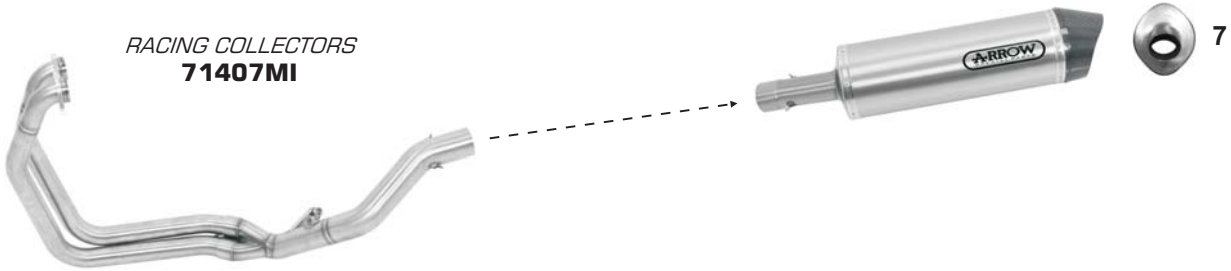

MAXI RACE-TECH CARBON END CAP

	9 HOMOL.
TITANIUM	72612PK*
ALUMINIUM	72612AK*
ALUMINIUM "DARK"	72612AKN*

⚠ * **SILENCERS ALSO FIT TO ORIGINAL COLLECTORS**

B M W

F 800 S / ST '06/13

VEHICLE TYPE: **E8ST var. 0216 ver. A**
E8ST var. 0234 ver. A

RACING COLLECTORS
71352MI

7

MAXI RACE-TECH CARBON END CAP

	HOMOL.
TITANIUM	71713PK
ALUMINIUM	71713AK

7

MAXI RACE-TECH CARBON END CAP

	HOMOL.
TITANIUM	71745PK*
ALUMINIUM	71745AK*

* **SILENCERS FOR ORIGINAL COLLECTORS**

B M W

F 800 GT '12/14

VEHICLE TYPE: **E8ST var. 0B03 ver. A / B / C / D / E**

9e5 2006/120/CE

HOMOLOGATED CATALYST
11010KZ

RACING COLLECTORS
71497MI*

7

MAXI RACE-TECH CARBON END CAP

	HOMOL.
TITANIUM	71810PK*
ALUMINIUM	71810AK*
ALUMINIUM "DARK"	71810AKN*

* **ALL THE COMPONENTS ARE INTERCHANGEABLE WITH THE ORIGINAL ONES**

B M W

F 800 R '09/14

VEHICLE TYPE: **E8ST var. 0217 ver. A**

9 e 5
2006/120/CE

RACING COLLECTORS
71408MI

7

MAXI RACE-TECH
CARBON END CAP

	HOMOL.
TITANIUM	71746PK*#
ALUMINIUM	71746AK*#
ALUMINIUM "DARK"	71746AKN*#

* **SILENCERS ALSO FIT TO ORIGINAL COLLECTORS**

 # SILENCERS NOT TO BE FITTED TO ORIGINAL BMW SIDE-BAGS

B M W

S 1000 RR '09/14

9 e 5 2006/120/CE

VEHICLE TYPE: **K10 var. 0507 ver. A**
K10 var. 0507 ver. B
K10 var. 0524 ver. A

5

HOMOLOGATED CATALYZED COLLECTORS
71413KZ

RACING COLLECTORS
71413MI

dB-KILLER FOR GP2 SILENCER
11009DB

4

4

2

8

FULL SYSTEM REPLICA «SBK»
COMPETITION

RACE-TECH TITANIUM SILENCER WITH CARBON END CAP AND dB-KILLER TITANIUM LINK PIPE STEEL OR TITANIUM COLLECTORS

8

COMPETITION

	CARBON CAP
FULL TITANIUM	71117CKZ
STEEL COLLECT.	71116CKZ

KIT COMPLETO REPLICA «SBK»
COMPETITION «EVO»

WORKS TITANIUM SILENCER WITH CARBON END CAP AND dB-KILLER TITANIUM LINK PIPE STEEL OR TITANIUM COLLECTORS

4

COMPETITION "EVO"

	CARBON CAP
FULL TITANIUM	71119CKZ
STEEL COLLECT.	71118CKZ

WORKS CARBON END CAP

	9 HOMOL.
TITANIUM	71751PK

WORKS CARBON END CAP

	9 HOMOL.
TITANIUM	71750PK*

GP2 SILENCER

	RACING
FULL TITANIUM	71001GP*

RACE-TECH CARBON CAP

	9 HOMOL.
TITANIUM	71803PK*
ALUMINIUM	71803AK*
ALUMINIUM "DARK"	71803AKN*

* **SILENCERS FOR ORIGINAL COLLECTORS WITHOUT DB-KILLER**

B M W

R 1200 GS '04/05

9e5 2006/120/CE

VEHICLE TYPE: **R12 var. 0307 ver. A**
R12 var. 0307 ver. B

RACING COLLECTORS
71427MI

CENTRAL LINK PIPE
71293MI#

7

7

MAXI RACE-TECH CARBON END CAP

	9 HOMOL.
TITANIUM	71689PK*
ALUMINIUM	71689AK*
ALUMINIUM "DARK"	71689AKN*

MAXI RACE-TECH STEEL END CAP

	9 HOMOL.
TITANIUM	71689PO*
ALUMINIUM	71689AO*

 # 71293MI LINK PIPE FITS TO BOTH ARROW AND ORIGINAL COLLECTORS

*** SILENCERS NOT TO BE FITTED TO ORIGINAL BMW SIDE-BAGS**

B M W

R 1200 GS / GS Adventure '06/09

9e5 2006/120/CE

VEHICLE TYPE: **R12 var. 0303 ver. A**
R12 var. 0380 ver. A

RACING COLLECTORS
71427MI

CENTRAL LINK PIPE
71388MI#

7

7

MAXI RACE-TECH CARBON END CAP

	9 HOMOL.
TITANIUM	71689PK
ALUMINIUM	71689AK
ALUMINIUM "DARK"	71689AKN

MAXI RACE-TECH STEEL END CAP

	9 HOMOL.
TITANIUM	71689PO
ALUMINIUM	71689AO

 # 71388MI LINK PIPE FITS TO BOTH ARROW AND ORIGINAL COLLECTORS

B M W

R 1200 GS / GS Adventure '10/12

9e5 2006/120/CE

VEHICLE TYPE: **R12 var. 0450 ver. A**
R12 var. 0470 ver. A

RACING COLLECTORS
71427MI

LINK PIPE FOR ARROW COLLECTORS
71426MI

RACING COLLECTORS INTERCHANGEABLE WITH ORIGINAL ONES
71465MI*

VALVE REPLACING UNIT
11001MI

71466MI*
LINK PIPE FOR ORIGINAL COLLECTORS

7

7

MAXI RACE-TECH CARBON END CAP

	HOMOL.
TITANIUM	71689PK
ALUMINIUM	71689AK
ALUMINIUM "DARK"	71689AKN

MAXI RACE-TECH STEEL END CAP

	HOMOL.
TITANIUM	71689PO
ALUMINIUM	71689AO

⚠ * **71465MI and 71466MI LINK PIPES ALSO FIT TO ORIGINAL VALVE**

B M W

R 1200 GS / GS Adventure '13/14

9e5 2006/120/CE

VEHICLE TYPE: **R12W var. 0A01 ver. A / B / C / D**

HOMOLOGATED CATALYST
11015KZ

RACING COLLECTORS
71488MI*

7

MAXI RACE-TECH CARBON END CAP

	HOMOL.
TITANIUM	71805PK*
ALUMINIUM	71805AK*
ALUMINIUM "DARK"	71805AKN*

⚠ * **ALL THE COMPONENTS ARE INTERCHANGEABLE WITH THE ORIGINAL ONES**

B M W

R 1200 RT '10/13

VEHICLE TYPE: **R12T var. 0430 ver. A**

9 e 5 2006/120/CE

MAXI RACE-TECH CARBON END CAP

	HOMOL.
TITANIUM	71767PK
ALUMINIUM	71767AK

SILENCERS FOR ORIGINAL COLLECTORS WITH VALVE REPLACING UNIT

B M W

R 1200 R '06/10

VEHICLE TYPE: **R1ST var. 0378 ver. A**

9 e 5 2006/120/CE

RACING COLLECTORS
71427MI

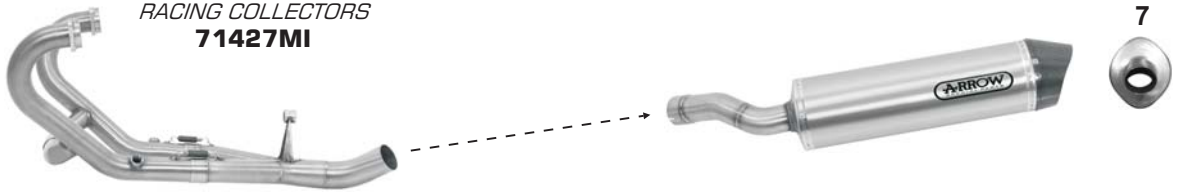

MAXI RACE-TECH CARBON END CAP

	HOMOL.
TITANIUM	71747PK*
ALUMINIUM	71747AK*
ALUMINIUM "DARK"	71747AKN*

* **SILENCERS ALSO FIT TO ORIGINAL COLLECTORS**

B M W

R 1200 R '11/13

9e5 2006/120/CE

VEHICLE TYPE: **R1ST var. 0400 ver. A**

RACING COLLECTORS INTERCHANGEABLE WITH ORIGINAL ONES
71465MI

VALVE REPLACING UNIT
11001MI*

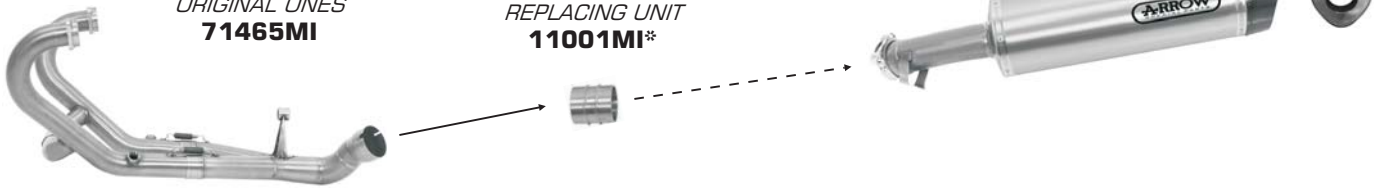

MAXI RACE-TECH CARBON END CAP

	9 HOMOL.
TITANIUM	71811PK*
ALUMINIUM	71811AK*
ALUMINIUM "DARK"	71811AKN*

⚠ * **COMPONENTS INTERCHANGEABLE WITH THE ORIGINAL ONES**

B M W

K 1200 R '05/08

VEHICLE TYPE: **K12R var. 0594 ver. 0**
K12R var. 0584 ver. A

K 1200 S '05/08

VEHICLE TYPE: **K12S var. 0581 ver. A**

LINK PIPE FOR ORIGINAL COLLECTORS
71323MI

MAXI RACE-TECH CARBON END CAP

	9 HOMOL.
TITANIUM	71697PK

MAXI RACE-TECH STEEL END CAP

	9 HOMOL.
TITANIUM	71697PO
ALUMINIUM	71697AO

B M W

K 1300 S - K 1300 R '09/14

9e5 2006/120/CE

VEHICLE TYPE: **K12S var. 0508 ver. A**
K12S var. 0518 ver. A

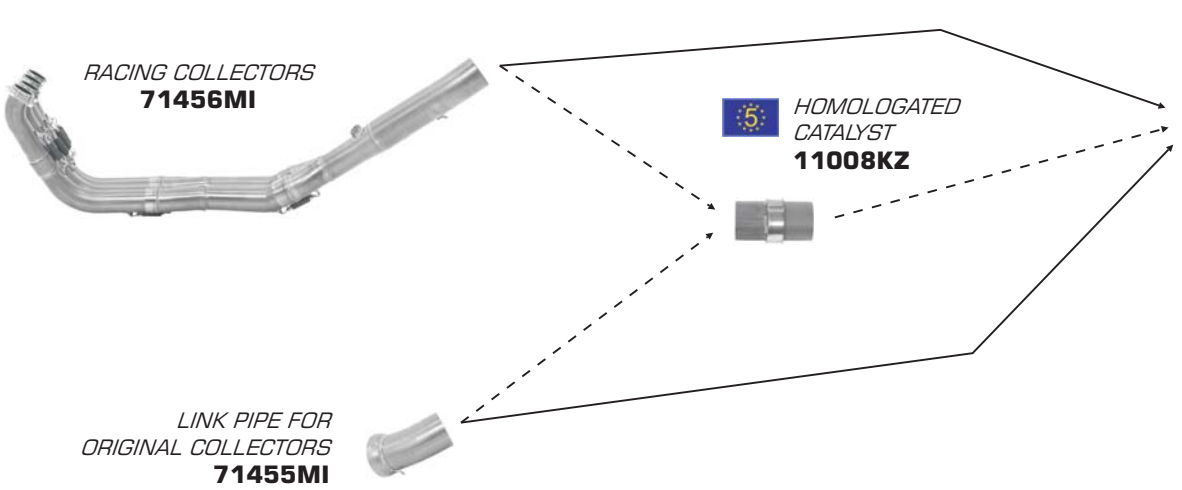

MAXI RACE-TECH CARBON END CAP

	9 HOMOL.
TITANIUM	71790PK
ALUMINIUM	71790AK
ALUMINIUM "DARK"	71790AKN

Derbi

GPR 125 4T '10/14

9e5 2006/120/CE

VEHICLE TYPE: **RG var.1A ver. 1A**

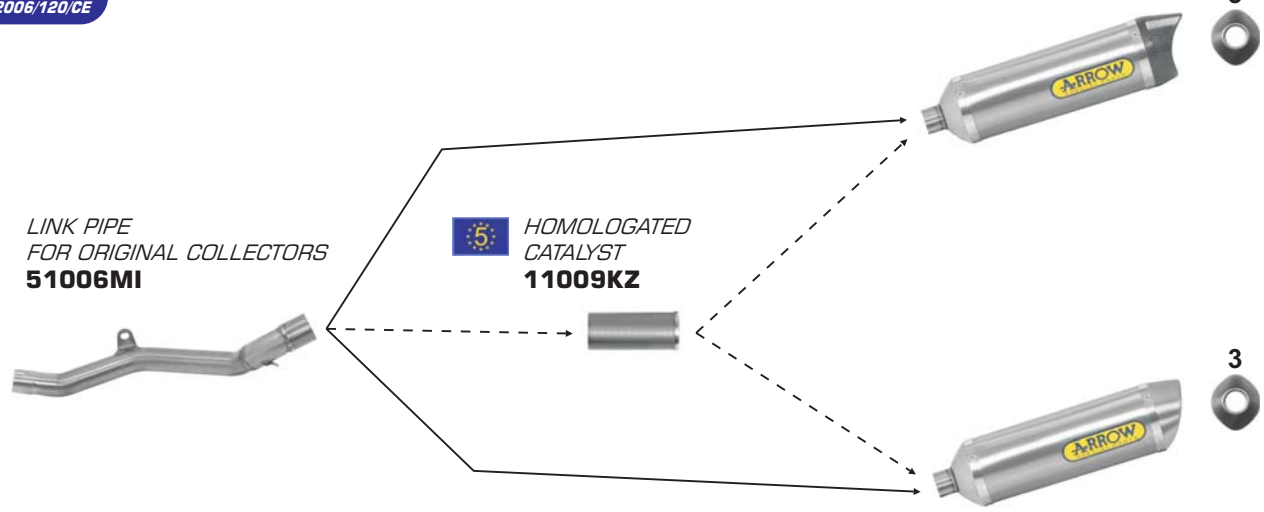

STREET THUNDER CARBON END CAP

	9 HOMOL.
TITANIUM	51505PK
ALUMINIUM	51505AK
ALUMINIUM "DARK"	51505AKN

STREET THUNDER STEEL END CAP

	9 HOMOL.
TITANIUM	51505PO
ALUMINIUM	51505AO
ALUMINIUM "DARK"	51505AON

Ducati

Monster 600 '94/00 - Monster 750 '94/00

VEHICLE TYPE: **M3 00**

VEHICLE TYPE: **M1**

Monster 900 '94/99

VEHICLE TYPE: **MZDM900M/C**

LOW MOUNT VERSION

RACE-TECH STEEL END CAP

	HOMOL.
TITANIUM	71638PO
CARBON FIBRE	71638MO
ALUMINIUM	71638AO

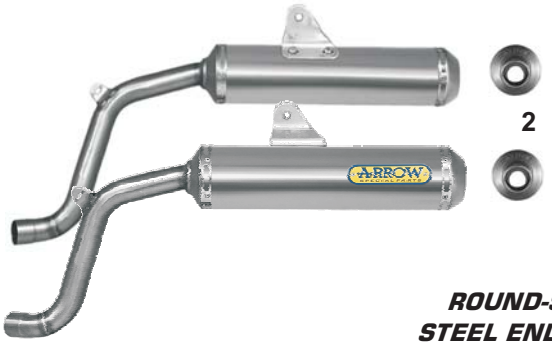

HIGH MOUNT VERSION
REMOVAL OF PASSENGER REAR SETS IS NOT REQUIRED

ROUND-SIL STEEL END CAP

	HOMOL.
TITANIUM	71657PR
CARBON FIBRE	71657MC

Ducati

Monster 620 '02/06 - Monster 695 '06

VEHICLE TYPE: **M4 var. 03**

VEHICLE TYPE: **M4 var. 19 ver. AA**

Monster 800 '03/05 - Monster 1000 '03/05

VEHICLE TYPE: **M4 var. 06 ver. A**

VEHICLE TYPE: **M4 var. 04 ver. A**

LOW MOUNT VERSION

RACE-TECH STEEL END CAP

	HOMOL.
TITANIUM	71638PO
CARBON FIBRE	71638MO
ALUMINIUM	71638AO

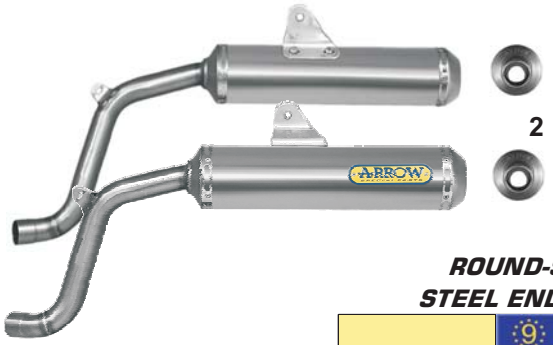

HIGH MOUNT VERSION
REMOVAL OF PASSENGER REAR SETS IS NOT REQUIRED

ROUND-SIL STEEL END CAP

	HOMOL.
TITANIUM	71663PR
CARBON FIBRE	71663MC

Ducati

Monster S4 '01/03 - Monster 900 i.e. '00/02

9e5 2006/120/CE

VEHICLE TYPE: **M4**

VEHICLE TYPE: **ZDM200**

LOW MOUNT VERSION

RACE-TECH STEEL END CAP

	9 HOMOL.
TITANIUM	71613P0
CARBON FIBRE	71613M0
ALUMINIUM	71613A0

HIGH MOUNT VERSION
REMOVAL OF PASSENGER REAR SETS IS NOT REQUIRED

ROUND-SIL STEEL END CAP

	9 HOMOL.
TITANIUM	71663PR
CARBON FIBRE	71663MC

Ducati

Monster S4R '03/06 - Monster S2R 800 '04/06

9e5 2006/120/CE

VEHICLE TYPE: **M4 var. 05 ver. A**

VEHICLE TYPE: **M4 var. 14 ver. AA**

RACING COLLECTORS
71266MI

2 : 2 LINK PIPE
FOR ORIGINAL COLLECTORS
71265MI

ROUND-SIL CARBON END CAP

	9 HOMOL.	RACING
TITANIUM	71662RK	
CARBON FIBRE		71062DK#

ROUND-SIL STEEL END CAP

	9 HOMOL.	RACING
TITANIUM	71662PR	
CARBON FIBRE		71062MC#

 # CARBON FIBRE SILENCERS TO BE FITTED TO FULL SYSTEM ONLY

Ducati

Monster S2R 1000 '05/06

VEHICLE TYPE: **M4 var. 16 ver. AA**

9e5 2006/120/CE

RACING COLLECTORS
71327MI

2 : 2 LINK PIPES
FOR ORIGINAL COLLECTORS
71265MI

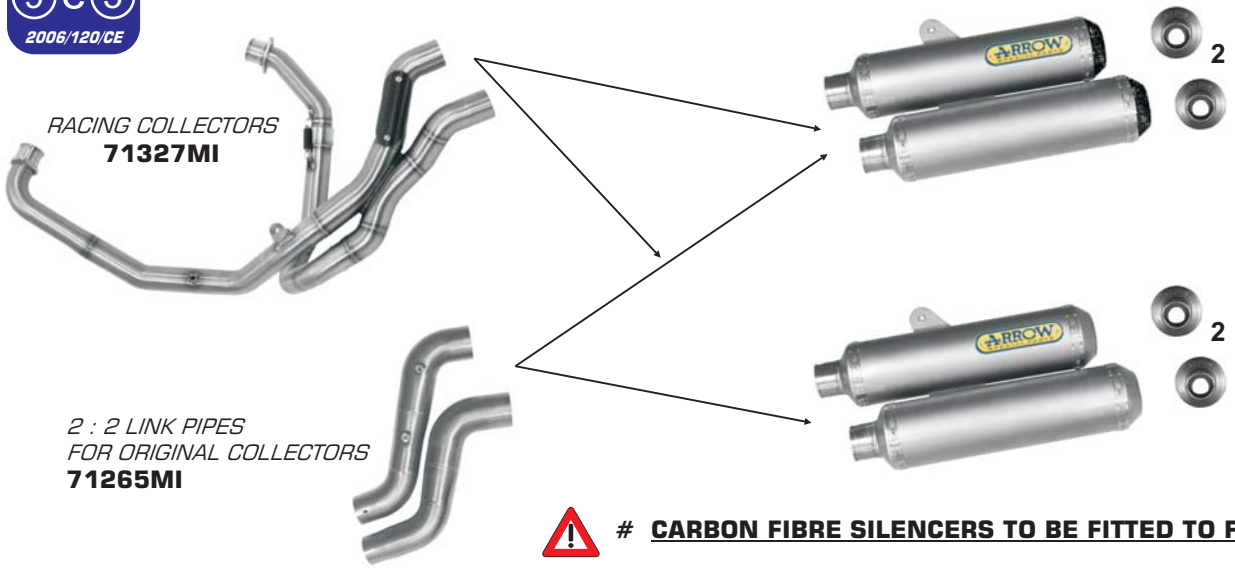

ROUND-SIL
CARBON END CAP

	9 HOMOL.	RACING
TITANIUM	71662RK	
CARBON FIBRE		71062DK#

ROUND-SIL
STEEL END CAP

	9 HOMOL.	RACING
TITANIUM	71662PR	
CARBON FIBRE		71062MC#

 # CARBON FIBRE SILENCERS TO BE FITTED TO FULL SYSTEM ONLY

Ducati

Monster S4R - S4RS Testa Stretta '06/07

VEHICLE TYPE: **M4 var. 17 ver. AA**

9e5 2006/120/CE

RACING COLLECTORS
71341MI

2 : 2 LINK PIPES
FOR ORIGINAL COLLECTORS
71340MI*

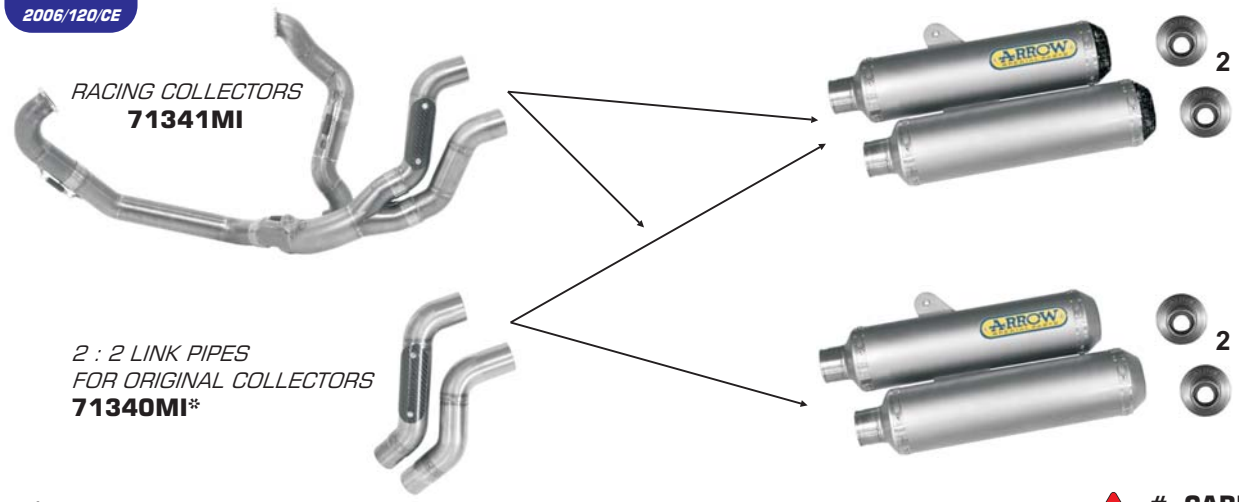

ROUND-SIL
CARBON END CAP

	9 HOMOL.	RACING
TITANIUM	71662RK	
CARBON FIBRE		71062DK#

ROUND-SIL
STEEL END CAP

	9 HOMOL.	RACING
TITANIUM	71662PR	
CARBON FIBRE		71062MC#

*** LINK PIPES NOT TO BE FITTED TO REMUS ORIGINAL COLLECTORS**

 # CARBON FIBRE SILENCERS TO BE FITTED TO FULL SYSTEM ONLY

Ducati

Multistrada 620 '04/06

VEHICLE TYPE: **A1 var. 03 ver. AA**

9 e 5 2006/120/CE

NON CATALYZED CENTRAL COLLECTOR
71320MI

1 : 2 LINK PIPE
71319MI*

2

ROUND-SIL STEEL END CAP

	9 HOMOL.
TITANIUM	71664PR
CARBON FIBRE	71664MC

* **71319MI LINK PIPE FITS TO BOTH ARROW AND ORIGINAL COLLECTORS**

Ducati

Monster 696 '08/14

VEHICLE TYPE: **M5 var. 00 ver. AA**

Monster 796 '10/14

VEHICLE TYPE: **M5 var. 06 ver. AA**

9 e 5 2006/120/CE

5 *HOMOLOGATED CATALYSTS*
11005KZ

3

3

SILENCERS FOR ORIGINAL COLLECTORS

STREET THUNDER CARBON END CAP

	9 HOMOL.	RACING
TITANIUM	71731PK	
CARBON FIBRE		71131MK
ALUMINIUM	71731AK	
ALUMINIUM "DARK"	71731AKN	

STREET THUNDER STEEL END CAP

	9 HOMOL.	RACING
TITANIUM	71731PO	
CARBON FIBRE		71131MO
ALUMINIUM	71731AO	
ALUMINIUM "DARK"	71731AON	

Ducati

HyperMotard 796 '09/12

VEHICLE TYPE: **B1 var. 01 ver. AA**

9e5 2006/120/CE

RACING COLLECTORS
71417MI

STREET THUNDER CARBON END CAP

	9 HOMOL.
TITANIUM	71754PK*

STREET THUNDER STEEL END CAP

	9 HOMOL.
TITANIUM	71754PO*
ALUMINIUM	71754AO*
ALUMINIUM "DARK"	71754AON*

THUNDER SHORT VERS. CARBON END CAP

	9 HOMOL.
TITANIUM	71782PK*
ALUMINIUM	71782AK*
ALUMINIUM "DARK"	71782AKN*

THUNDER SHORT VERS. STEEL END CAP

	9 HOMOL.
TITANIUM	71782PO*
ALUMINIUM	71782AO*
ALUMINIUM "DARK"	71782AON*

⚠ * **SILENCERS ALSO FIT TO ORIGINAL COLLECTORS**

Ducati

Hypermotard - Hyperstrada '13/14

VEHICLE TYPE: **B2 var. 00 ver. AA**

9e5 2006/120/CE

LINK PIPE FOR ORIGINAL COLLECTORS
71490MI

HOMOLOGATED CATALYSTS
11008KZ

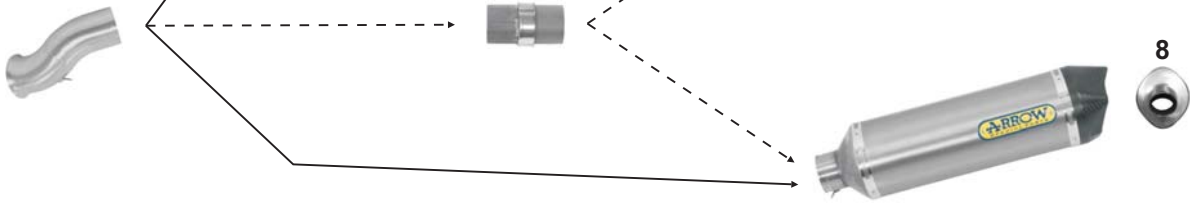

X-KONE CARBON END CAP

	9 HOMOL.
NICHROM	71806XKI

RACE-TECH CARBON END CAP

	9 HOMOL.
TITANIUM	71806PK
CARBON FIBRE	71806MK
ALUMINIUM	71806AK
ALUMINIUM "DARK"	71806AKN

Ducati

StreetFighter 848 '12/14

VEHICLE TYPE: **F1 var. 02 ver. AA**

9e5 2006/120/CE

HOMOLOGATED CATALYSTS
11007KZ

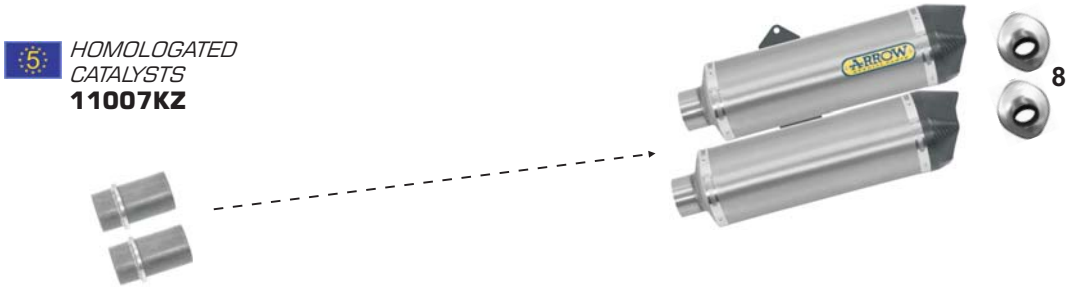

RACE-TECH CARBON END CAP

	9 HOMOL.
TITANIUM	71752PK
ALUMINIUM	71752AK
ALUMINIUM "DARK"	71752AKN

SILENCERS FOR ORIGINAL COLLECTORS

Ducati

848 '08/10

VEHICLE TYPE: **H6 var. 00 ver. AA**

9e5 2006/120/CE

RACING COLLECTORS
71387MI

HOMOLOGATED CATALYSTS
11006KZ

STREET THUNDER CARBON END CAP

	HOMOL.
TITANIUM	71720PK*
ALUMINIUM	71720AK*
ALUMINIUM "DARK"	71720AKN*

STREET THUNDER STEEL END CAP

	HOMOL.
TITANIUM	71720PO*
ALUMINIUM	71720AO*
ALUMINIUM "DARK"	71720AON*

⚠ * **ALL SILENCERS ALSO FIT TO ORIGINAL COLLECTORS**

Ducati

Multistrada 1000 DS '04/06

VEHICLE TYPE: **A1 var. 00 ver. AA**

9e5 2006/120/CE

RACING COLLECTORS
71299MI

1 : 2 LINK PIPES
71300MI*

ROUND-SIL STEEL END CAP

	HOMOL.
TITANIUM	71664PR
CARBON FIBRE	71664MC

⚠ * **71300MI LINK PIPES FIT TO BOTH ARROW AND ORIGINAL COLLECTORS**

Ducati

Multistrada 1100 - 1100 S '07/09

VEHICLE TYPE: **A1 var. 09 ver. AA**

9e5 2006/120/CE

1 : 2 LINK PIPES
71300MI*

RACING COLLECTORS
71356MI

ROUND-SIL
STEEL END CAP

	9 HOMOL.
TITANIUM	71664PR
CARBON FIBRE	71664MC

⚠ * **71300MI LINK PIPES FIT TO BOTH ARROW AND ORIGINAL COLLECTORS**

Ducati

Monster 1100 '09/10

VEHICLE TYPE: **M5 var. 02 ver. AA**

9e5 2006/120/CE

5
HOMOLOGATED CATALYSTS
11005KZ

RACING COLLECTORS
71416MI

STREET THUNDER CARBON END CAP

	9 HOMOL.	RACING
TITANIUM	71731PK*	
CARBON FIBRE		71131MK*
ALUMINIUM	71731AK*	
ALUMINIUM "DARK"	71731AKN*	

STREET THUNDER STEEL END CAP

	9 HOMOL.	RACING
TITANIUM	71731PO*	
CARBON FIBRE		71131MO*
ALUMINIUM	71731AO*	
ALUMINIUM "DARK"	71731AON*	

⚠ * **SILENCERS ALSO FIT TO ORIGINAL COLLECTORS**

Ducati

Monster 1100 EVO '11/13

9 e 5 2006/120/CE

VEHICLE TYPE: **M5 var. 11 ver. AA**

LINK PIPE FOR ORIGINAL COLLECTORS
71452MI

HOMOLOGATED CATALYST
11008KZ

8

4

RACE-TECH CARBON END CAP

	9 HOMOL.
TITANIUM	**71786PK**
CARBON FIBRE	**71786MK**
ALUMINIUM	**71786AK**
ALUMINIUM "DARK"	**71786AKN**

WORKS CARBON END CAP

	9 HOMOL.
TITANIUM	**71787PK**

Ducati

StreetFighter '09/14

9 e 5 2006/120/CE

VEHICLE TYPE: **F1 var. 00 ver. AA**

HOMOLOGATED CATALYST
11007KZ

8

RACE-TECH CARBON END CAP

	9 HOMOL.
TITANIUM	**71752PK**
ALUMINIUM	**71752AK**
ALUMINIUM "DARK"	**71752AKN**

SILENCERS FOR ORIGINAL COLLECTORS

Ducati

HyperMotard 1100 '07/12

9 e 5 2006/120/CE

VEHICLE TYPE: **B1 var. 00 ver. AA**
B1 var. 03 ver. AA
B1 var. 04 ver. AA

RACING COLLECTORS
71436MI

3

3

3

3

STREET THUNDER CARBON END CAP

	HOMOL.	RACING
TITANIUM	71730PK*	
CARBON FIBRE		71130MK*

STREET THUNDER STEEL END CAP

	HOMOL.	RACING
TITANIUM	71730PO*	
CARBON FIBRE		71130MO*
ALUMINIUM	71730AO*	
ALUMINIUM "DARK"	71730AON*	

THUNDER SHORT VERSION CARBON END CAP

	HOMOL.
TITANIUM	71783PK*
ALUMINIUM	71783AK*
ALUMINIUM "DARK"	71783AKN*

THUNDER SHORT VERSION STEEL END CAP

	HOMOL.
TITANIUM	71783PO*
ALUMINIUM	71783AO*
ALUMINIUM "DARK"	71783AON*

* **SILENCERS ALSO FIT TO ORIGINAL COLLECTORS**

Ducati

Diavel '11/14

9 e 5 2006/120/CE

VEHICLE TYPE: **G1 var. 00 ver. AB**

HOMOLOGATED CATALYSTS
11008KZ

LINK PIPE FOR ORIGINAL COLLECTORS
71451MI

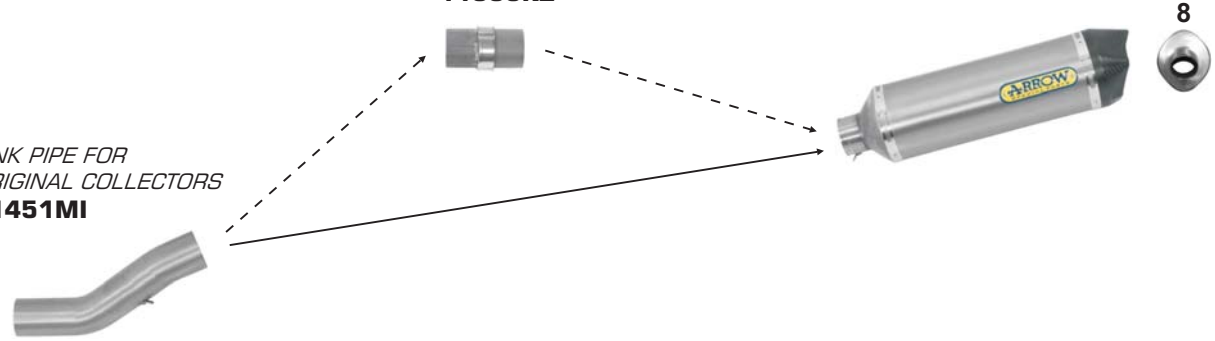

RACE-TECH CARBON END CAP

	HOMOL.
TITANIUM	71768PK
CARBON FIBRE	71768MK
ALUMINIUM	71768AK
ALUMINIUM "DARK"	71768AKN

Ducati

1098 - 1098 S '07/08

9 e 5 2006/120/CE

VEHICLE TYPE: **H7 var. 00 ver. AA**

FULL SYSTEM COMPETITION
THUNDER TITANIUM SILENCER
STEEL LINK PIPE ø54/60/72mm.
STEEL COLLECTORS

71061CPZ

HOMOLOGATED CATALYSTS
11006KZ

STREET THUNDER CARBON END CAP

	HOMOL.
TITANIUM	71720PK
ALUMINIUM	71720AK
ALUMINIUM "DARK"	71720AKN

STREET THUNDER STEEL END CAP

	HOMOL.
TITANIUM	71720PO
ALUMINIUM	71720AO
ALUMINIUM "DARK"	71720AON

SILENCERS FOR ORIGINAL COLLECTORS

Ducati 1098 R '08/09

FULL SYSTEM
COMPETITION
THUNDER TITANIUM SILENCER
STEEL LINK PIPE ø54/60/72mm.
STEEL COLLECTORS

71081CPZ

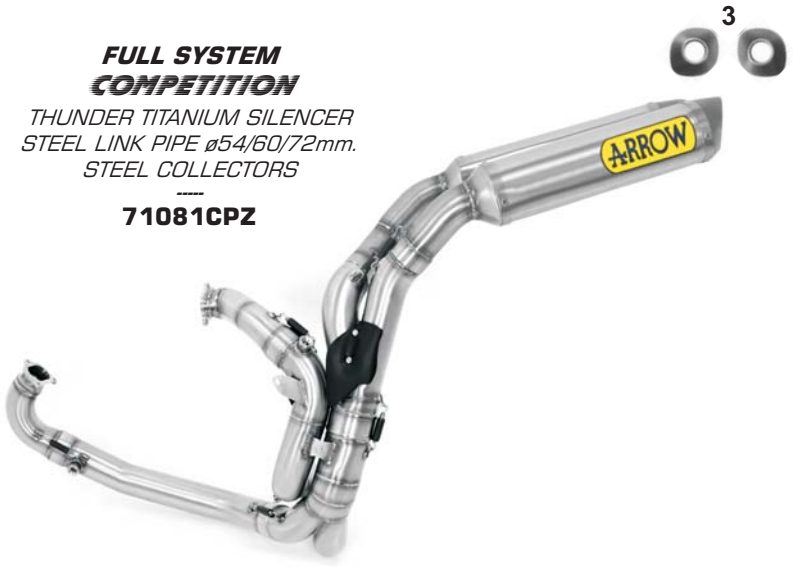

STREET THUNDER CARBON END CAP

	RACING
TITANIUM	71120PK

STREET THUNDER STEEL END CAP

	RACING
TITANIUM	71120PO
ALUMINIUM	71120AO

SILENCERS FOR ORIGINAL COLLECTORS

Ducati 1198 '09/11

VEHICLE TYPE: **H7 var. 04 ver. AA**

9 e 5 2006/120/CE

FULL SYSTEM
COMPETITION
THUNDER TITANIUM SILENCER
STEEL LINK PIPE ø54/60/72mm.
STEEL COLLECTORS

71081CPZ

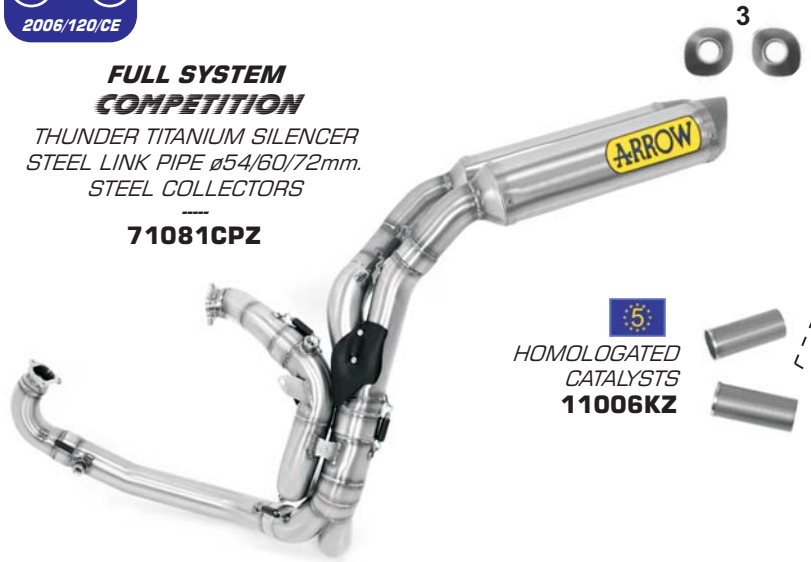

HOMOLOGATED CATALYSTS
11006KZ

STREET THUNDER CARBON END CAP

	9 HOMOL.
TITANIUM	71720PK
ALUMINIUM	71720AK
ALUMINIUM "DARK"	71720AKN

STREET THUNDER STEEL END CAP

	9 HOMOL.
TITANIUM	71720PO
ALUMINIUM	71720AO
ALUMINIUM "DARK"	71720AON

SILENCERS FOR ORIGINAL COLLECTORS

Ducati

MultiStrada 1200 - 1200 S '10/14

VEHICLE TYPE: **A2 var. 00 ver. AA**
A2 var. 00 ver. AD

9 e 5 2006/120/CE

NON CATALYZED RACING COLLECTORS FOR ORIGINAL SILENCERS
71601MI

RACING COLLECTORS
71429MI

HOMOLOGATED CATALYST
11008KZ

8

4

RACE-TECH CARBON END CAP

	HOMOL.
TITANIUM	71768PK
CARBON FIBRE	71768MK
ALUMINIUM	71768AK
ALUMINIUM "DARK"	71768AKN

WORKS CARBON END CAP

	HOMOL.
TITANIUM	71769PK

Fantic

TZ 250 - 300 2T '10/11

1

RACING TITANIUM SILENCER
52044SU*

3

RACING THUNDER TITANIUM SILENCER
52006PK*

RACING EXHAUST
52043SU*

*** ALL THE COMPONENTS ARE INTERCHANGEABLE WITH THE ORIGINAL ONES**

Fantic *TF 250 ES Caballero '13/14*

3

RACING *THUNDER TITANIUM*
72038TK

3

RACING *OFF-ROAD V2*
72038TAK

3

RACING *THUNDER ALUMINIUM*
72038TA

3

RACING
FULL SYSTEM
MX COMPETITION
"FULL TITANIUM"
72039TK

SILENCERS FOR ORIGINAL COLLECTORS

Gas Gas *EC 200 - 250 - 300 2T '07/11*

1

RACING *TITANIUM SILENCER*
52044SU*

3

RACING *THUNDER TITANIUM SILENCER*
52006PK*

RACING EXHAUST
52043SU*

* **ALL THE COMPONENTS ARE INTERCHANGEABLE WITH THE ORIGINAL ONES**

Gas Gas *EC 250 '11/12*

3

RACING THUNDER TITANIUM
72019TK

3

RACING OFF-ROAD V2
72019TAK

3

RACING THUNDER ALUMINIUM
72019TA

3

RACING
FULL SYSTEM
MX COMPETITION
"FULL TITANIUM"
72020TK

SILENCERS FOR ORIGINAL COLLECTOR

Gilera

Runner SP 125 '06/14 - Runner VXR 200 '06/13

9e5 2006/120/CE

VEHICLE TYPE: **M46 var. 3 ver. 00**

VEHICLE TYPE: **M46 var. 4 ver. 00**

RACING COLLECTORS
53043MI

HOMOLOGATED CATALYST
11013KZ

3

3

STREET THUNDER STEEL END CAP

	9 HOMOL.
ALUMINIUM	53503AO
ALUMINIUM "DARK"	53503AON

STREET THUNDER CARBON END CAP

	9 HOMOL.
TITANIUM	53503PK
ALUMINIUM	53503AK
ALUMINIUM "DARK"	53503AKN

Gilera

GP 800 '08/13

9e5 2006/120/CE

VEHICLE TYPE: **M55 var. 1 ver. 00**
M55 var. 1 ver. 01

RACING COLLECTORS
71412MI*

HOMOLOGATED CATALYZED COLLECTORS
71412KZ*

8

8

RACE-TECH CARBON END CAP

	9 HOMOL.
TITANIUM	71749PKK
ALUMINIUM	71749AK
ALUMINIUM "DARK"	71749AKN

RACE-TECH STEEL END CAP

	9 HOMOL.
ALUMINIUM	71749AO
ALUMINIUM "DARK"	71749AON

✲ **SYSTEM NOT TO BE FITTED TO CENTRAL STAND**

Honda

XR 125 L '04/05 - XR 125 R/SM '04/05

9e5 2006/120/CE

VEHICLE TYPE: **JD19 var. 1 ver. 1**

VEHICLE TYPE: **125 ver. E - 125 ver. M**

RACING COLLECTORS
52001MI

3

3

STREET THUNDER CARBON END CAP

	9 HOMOL.
ALUMINIUM	52501AK
ALUMINIUM "DARK"	52501AKN

STREET THUNDER STEEL END CAP

	9 HOMOL.
TITANIUM	52501PO
ALUMINIUM	52501AO

Honda

XL 125 V Varadero '01/12

VEHICLE TYPE: **JC32**

9e5 2006/120/CE

3

STREET THUNDER CARBON END CAP

	HOMOL.
ALUMINIUM	52503AK
ALUMINIUM "DARK"	52503AKN

3

STREET THUNDER STEEL END CAP

	HOMOL.
TITANIUM	52503PO
ALUMINIUM	52503AO

SILENCERS FOR ORIGINAL COLLECTORS

Honda

MSX 125 '13/14

VEHICLE TYPE: **JC61 var. 1 ver. 1**

9e5 2006/120/CE

RACING COLLECTOR
52004MI

HOMOLOGATED CATALYZED COLLECTOR
52004KZ

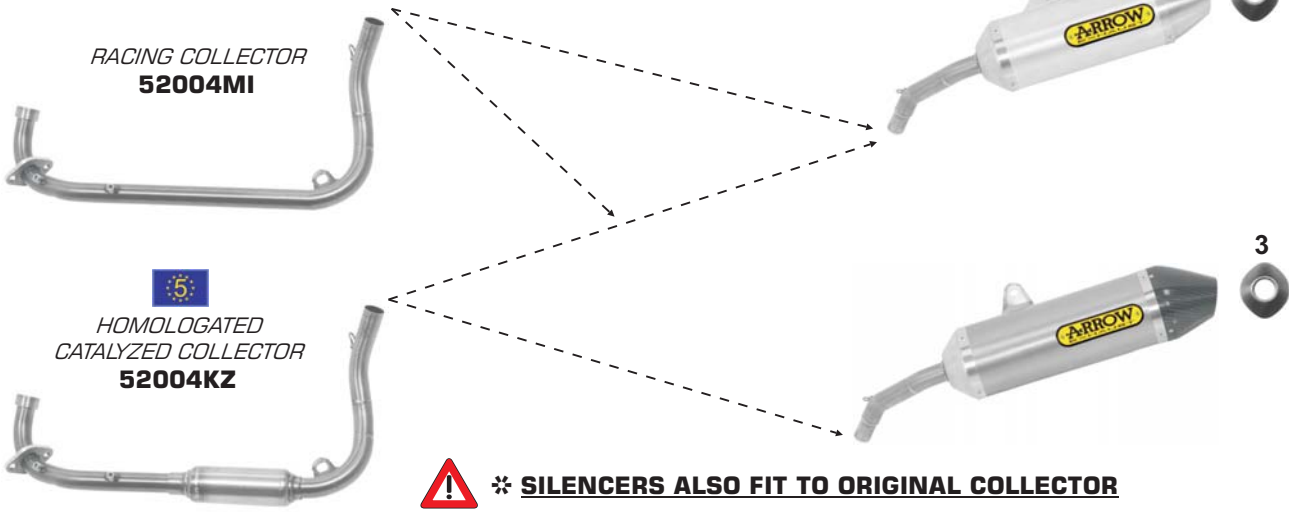

3

3

THUNDER STEEL END CAP

	HOMOL.
ALUMINIUM	52506AO*
ALUMINIUM "DARK"	52506AON*

THUNDER CARBON END CAP

	HOMOL.
TITANIUM	52506PK*
CARBON FIBRE	52506MK*
ALUMINIUM	52506AK*
ALUMINIUM "DARK"	52506AKN*

* **SILENCERS ALSO FIT TO ORIGINAL COLLECTOR**

Honda

CBF 125 '09/14

VEHICLE TYPE: **JC40 var. 1 ver. 1**

9 e 5 2006/120/CE

5

HOMOLOGATED CATALYZED LINK PIPE
51005KZ

RACING COLLECTOR
51004MI

NON CATALYZED LINK PIPE
51005MI

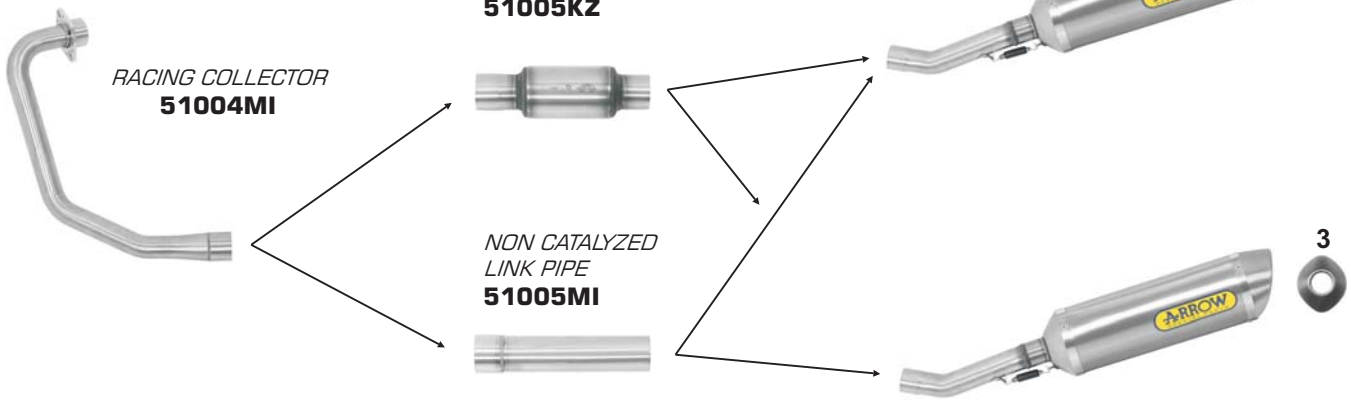

STREET THUNDER CARBON END CAP

	9 HOMOL.
TITANIUM	51504PK
ALUMINIUM	51504AK
ALUMINIUM "DARK"	51504AKN

STREET THUNDER STEEL END CAP

	9 HOMOL.
TITANIUM	51504PO
ALUMINIUM	51504AO
ALUMINIUM "DARK"	51504AON

Honda

CBR 125 R '04/10

VEHICLE TYPE: **JC34 - JC39 var. 1 ver. 1**

9 e 5 2006/120/CE

RACING COLLECTOR
51002MI

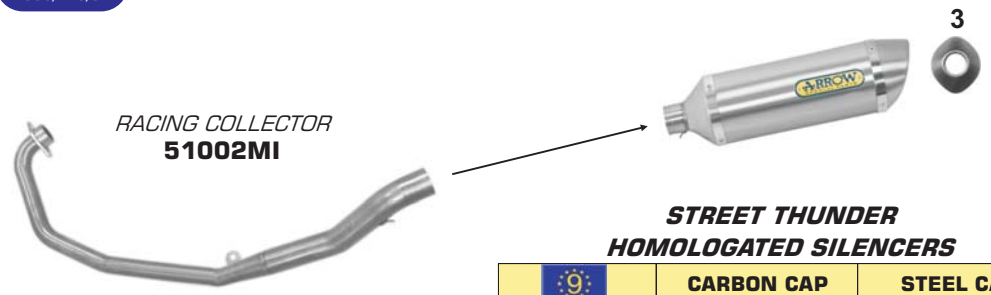

STREET THUNDER HOMOLOGATED SILENCERS

9	CARBON CAP	STEEL CAP
TITANIUM		51501PO
ALUMINIUM	51501AK	51501AO
ALUMINIUM "DARK"	51501AKN	51501AON

STREET THUNDER HOMOLOGATED SILENCERS

9	CARBON CAP	STEEL CAP
ALUMINIUM	51502AK	51502AO
ALUMINIUM "DARK"	51502AKN	51502AON

SILENCERS FOR ORIGINAL COLLECTOR

Honda

CBR 125 R '11/14

9e5 2006/120/CE

VEHICLE TYPE: **JC50 var. 1 ver. 1**

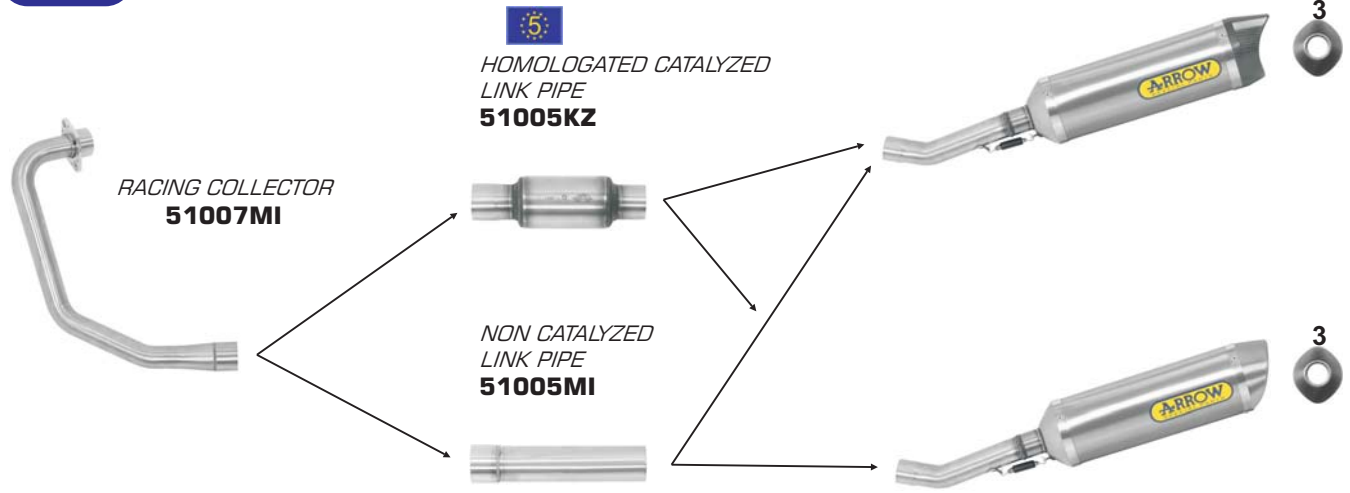

STREET THUNDER CARBON END CAP

	9 HOMOL.
TITANIUM	51506PK
ALUMINIUM	51506AK
ALUMINIUM "DARK"	51506AKN

STREET THUNDER STEEL END CAP

	9 HOMOL.
ALUMINIUM	51506AO
ALUMINIUM "DARK"	51506AON

Honda

CRF 150 R '07/13

✲ **ALL THE COMPONENTS ARE INTERCHANGEABLE WITH THE ORIGINAL ONES**

Honda

CRF 230 F '11/12

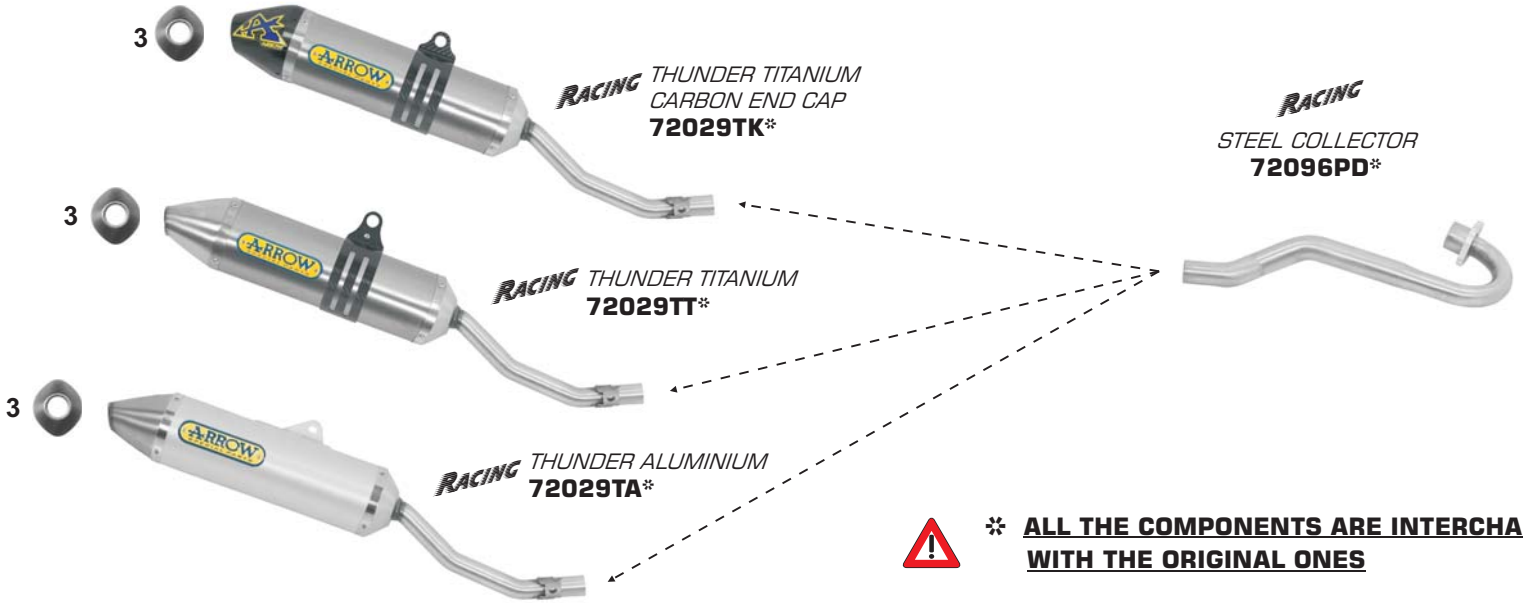

✲ **ALL THE COMPONENTS ARE INTERCHANGEABLE WITH THE ORIGINAL ONES**

Honda

CRF 250 L '12/13

9e5 2006/120/CE

VEHICLE TYPE: **MD38 var. 1 ver. 1**
MD38 var. 2 ver. 1

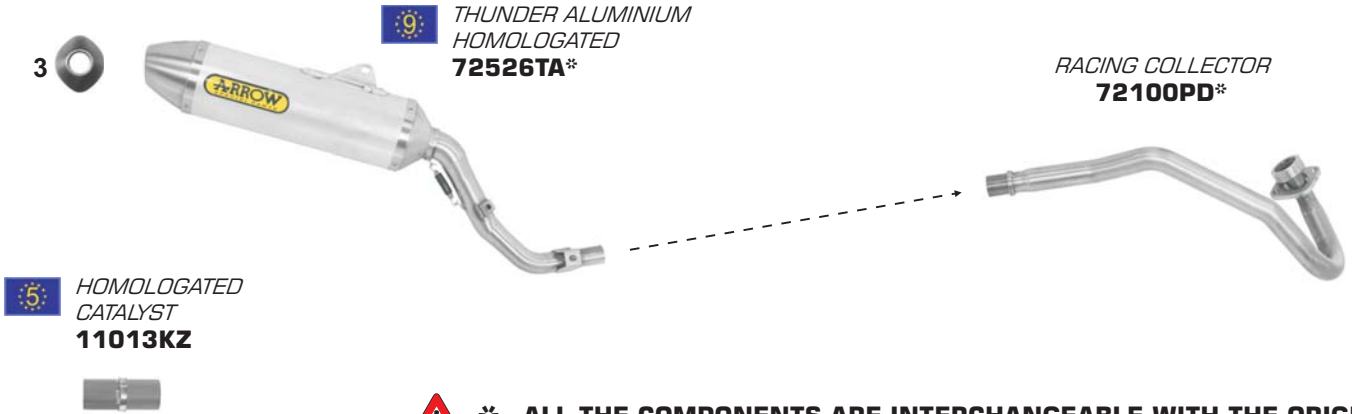

✲ **ALL THE COMPONENTS ARE INTERCHANGEABLE WITH THE ORIGINAL ONES**

Honda *CRE 250 F '10*

8

RACING
FULL SYSTEM
MX COMPETITION
"FULL TITANIUM"
72094TK

Honda *CRF 250 R '10*

3

RACING *THUNDER TITANIUM*
75082TK

3

RACING *OFF-ROAD V2*
75082TAK

3

RACING *THUNDER ALUMINIUM*
75082TA

3

RACING
FULL SYSTEM
MX COMPETITION
"FULL TITANIUM"
75083TK

SILENCERS FOR ORIGINAL COLLECTOR

Honda CRF 250 R '11/13

3

RACING THUNDER TITANIUM
75082TK

3

RACING OFF-ROAD V2
75099TAK

3

RACING THUNDER ALUMINIUM
75099TA

SILENCERS FOR ORIGINAL COLLECTOR

9

RACING
FULL SYSTEM
MX COMPETITION «EVO»
"FULL TITANIUM"
75104TKR

Honda CRF 250 R '14

3

RACING THUNDER TITANIUM (LH+RH)
75121TK

3

RACING OFF-ROAD V2 (LH+RH)
75121TAK

3

RACING THUNDER ALUMINIUM (LH+RH)
75121TA

TITANIUM LINK PIPE
72110PD*

TITANIUM
RACING COLLECTOR
72112PD#

STAINLESS STEEL
LINK PIPE
72111PD*

STAINLESS STEEL
RACING COLLECTOR
72113PD#

⚠ * **LINK PIPES ALSO FIT TO ORIGINAL COLLECTOR**

⚠ # **COLLECTORS ALSO FIT TO ORIGINAL LINK PIPE**

Honda

CBR 250 R '11/13

9e5 2006/120/CE

VEHICLE TYPE: **MC41 var. 1 ver. 1**
MC41 var. 2 ver. 1

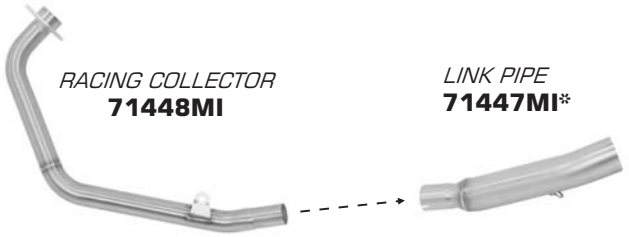

RACING COLLECTOR
71448MI

LINK PIPE
71447MI*

HOMOLOGATED CATALYST
11010KZ

⚠ * **71447MI LINK PIPE FITS TO BOTH ARROW AND ORIGINAL COLLECTORS**

8

X-KONE CARBON END CAP

	9 HOMOL.
NICHROM	71779XKI

8

RACE-TECH CARBON END CAP

	9 HOMOL.
TITANIUM	71779PKK
CARBON FIBRE	71779MKK
ALUMINIUM	71779AK
ALUMINIUM "DARK"	71779AKN

8

RACE-TECH STEEL END CAP

	9 HOMOL.
ALUMINIUM	71779AO
ALUMINIUM "DARK"	71779AON

FULL SYSTEM COMPETITION

X-KONE SILENCER
WITH CARBON END CAP AND dB-KILLER
STAINLESS STEEL COLLECTOR and LINK PIPE
71133CKZ#

8

Honda

SW-T 400 '09/13

9e5 2006/120/CE

VEHICLE TYPE: **NF03 var. 1 ver. 1 - NF03 var. 2 ver. 1**

RACING COLLECTORS
71424MI

HOMOLOGATED CATALYZED COLLECTOR
71424KZ

8

RACE-TECH CARBON END CAP

	HOMOL.
TITANIUM	71766PK

8

REFLEX STEEL END CAP

	HOMOL.
NICHROM	53524ST

Honda

CRF 450 R '06/08

3

RACING THUNDER TITANIUM
75050TT

3

RACING OFF-ROAD V2
75050TAK

3

RACING THUNDER ALUMINIUM
75050TA

SILENCERS FOR ORIGINAL COLLECTOR

3

RACING
FULL SYSTEM MX COMPETITION "FULL TITANIUM"
75051TT

Honda CRF 450 R '09/10

3

RACING THUNDER TITANIUM
75069TK

3

RACING OFF-ROAD V2
75069TAK

3

RACING THUNDER ALUMINIUM
75069TA

SILENCERS FOR ORIGINAL COLLECTOR

3

RACING
FULL SYSTEM
MX COMPETITION
"FULL TITANIUM"
75070TK

9

RACING
FULL SYSTEM
MX COMPETITION «EVO»
"FULL TITANIUM"
75070TKS

Honda CRF 450 R '11/12

3

RACING THUNDER TITANIUM
75069TK

3

RACING OFF-ROAD V2
75097TAK

3

RACING THUNDER ALUMINIUM
75097TA

SILENCERS FOR ORIGINAL COLLECTOR

3

RACING
FULL SYSTEM
MX COMPETITION
"FULL TITANIUM"
75070TK

9 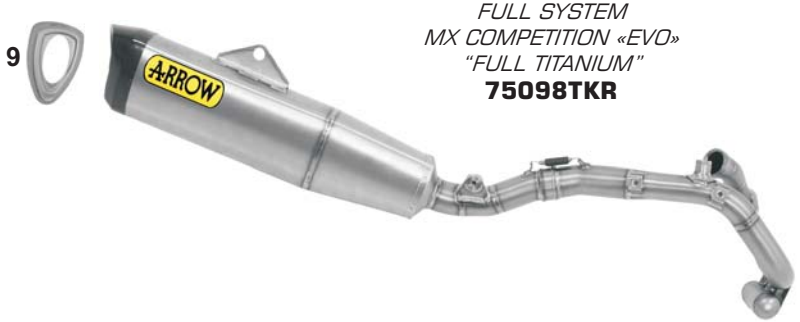

RACING
FULL SYSTEM
MX COMPETITION «EVO»
"FULL TITANIUM"
75098TKR

Honda CRF 450 R '13/14

3

RACING *THUNDER TITANIUM CARBON END CAP (LH+RH)*
75114TK*

3

RACING *OFF-ROAD V2 CARBON END CAP (LH+RH)*
75114TAK*

3

RACING *THUNDER ALUMINIUM CARBON END CAP (LH+RH)*
75114TA*

8

RACING *RACE-TECH TITANIUM CARBON END CAP*
75115TK*

TITANIUM RACING COLLECTOR
72103PD*

STEEL RACING COLLECTOR
72104PD*

⚠ * **ALL THE COMPONENTS ARE INTERCHANGEABLE WITH THE ORIGINAL ONES**

Honda

CB 500 F '13/14 - CBR 500 R '13/14

9e5 2006/120/CE

VEHICLE TYPE: **PC45 var. 1 ver. 1**

VEHICLE TYPE: **PC45 var. 2 ver. 1**

RACING COLLECTORS
71481MI

LINK PIPE
71480MI*

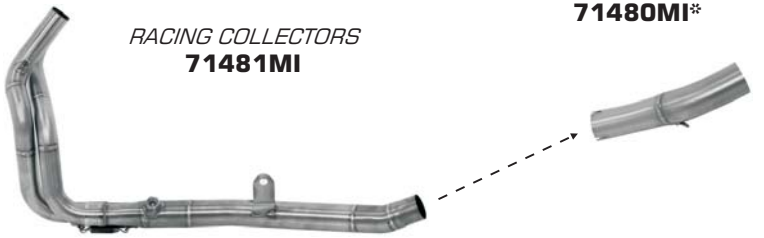

8

8

8

X-KONE CARBON END CAP

	HOMOL.
NICHROM	71804XKI

RACE-TECH CARBON END CAP

	HOMOL.
TITANIUM	71804PK
CARBON FIBRE	71804MK
ALUMINIUM	71804AK
ALUMINIUM "DARK"	71804AKN

RACE-TECH STEEL END CAP

	HOMOL.
TITANIUM	71804PO
CARBON FIBRE	71804MO
ALUMINIUM	71804AO
ALUMINIUM "DARK"	71804AON

⚠ * **71480MI LINK PIPE FITS TO BOTH ARROW AND ORIGINAL COLLECTORS**

Honda

Silver Wing 400 '05/09 - Silver Wing 600 '01/06

VEHICLE TYPE: **NF01 var. 1 ver. 1**

VEHICLE TYPE: **PF01 var. 1 ver. 1**

7

MAXI RACE-TECH STEEL END CAP

	HOMOL.
TITANIUM	71662PO
ALUMINIUM	71662AO
ALUMINIUM "DARK"	71662AON

SILENCERS FOR ORIGINAL COLLECTORS

Honda

CBF 600 '04/08

VEHICLE TYPE: **PC38 var. 3 ver. 1 / 2**
PC38 var. 4 ver. 1 / 2

71292MI
LINK PIPE FOR ORIGINAL COLLECTORS

8

RACE-TECH STEEL END CAP

	HOMOL.
TITANIUM	71688PO
CARBON FIBRE	71688MO
ALUMINIUM	71688AO

Honda

CBF 600 S '08/13

9e5 2006/120/CE

VEHICLE TYPE: **PC43 var. 1 ver. 1**
PC43 var. 2 ver. 1

71401MI
LINK PIPE
FOR ORIGINAL COLLECTORS

5 **71401KZ**
CATALYZED
LINK PIPE FOR ORIGINAL COLLECTORS

RACE-TECH
CARBON END CAP

	9 HOMOL.
TITANIUM	71737PKK
ALUMINIUM	71737AK
ALUMINIUM "DARK"	71737AKN

RACE-TECH
STEEL END CAP

	9 HOMOL.
TITANIUM	71737PO
ALUMINIUM	71737AO
ALUMINIUM "DARK"	71737AON

Honda

CB 600 F Hornet '03/06

VEHICLE TYPE: **PC36 var. 1 - PC36 var. 1 ver. 1**

RACING COLLECTORS
71256MI

RACE-TECH
STEEL END CAP

	9 HOMOL.
TITANIUM	71670PO*
CARBON FIBRE	71670MO*
ALUMINIUM	71670AO*

*** SILENCERS ALSO FIT TO ORIGINAL COLLECTORS**

Honda

CB 600 F Hornet '07/13

VEHICLE TYPE: **PC41 var. 1 ver. 1**

9 e 5 2006/120/CE

RACING COLLECTORS
71446MI

8

9

9

2

3

3

⚠ ✲ **ALL SILENCERS ALSO FIT TO ORIGINAL COLLECTORS**
THEY ARE HOMOLOGATED WITHOUT DB-KILLER

X-KONE CARBON END CAP

	9 HOMOL.
NICHROM	71722XKI* € 329,00

TROPHY CARBON END CAP

	9 HOMOL.
TITANIUM	71641PRK*

TROPHY STEEL END CAP

	9 HOMOL.
TITANIUM	71641PR*

PRO-RACE STEEL END CAP

	9 HOMOL.
TITANIUM	71642PR*
NICHROM	71642PRI*

THUNDER CARBON CAP

	9 HOMOL.
TITANIUM	71722PK*
CARBON FIBRE	71722MK*
ALUMINIUM	71722AK*
ALUMINIUM "DARK"	71722AKN*

THUNDER STEEL CAP

	9 HOMOL.
TITANIUM	71722PO*
CARBON FIBRE	71722MO*
ALUMINIUM	71722AO*
ALUMINIUM "DARK"	71722AON*

Honda

CBR 600 F '01/07

9e5 2006/120/CE

VEHICLE TYPE: **PC35 - PC35 var. 1 ver. 3**
PC35 var. 3 ver. 1

HIGH MOUNT LINK PIPE
71205MI

RACING COLLECTORS
71204MI

LOW MOUNT LINK PIPE
71206MI

8

RACE-TECH STEEL END CAP

	9 HOMOL.
TITANIUM	71607PO
CARBON FIBRE	71607MO
ALUMINIUM	71607AO

71203MI
LOW MOUNT LINK PIPE FOR ORIGINAL COLLECTORS

Honda

CBR 600 F Sport '01/03

9e5 2006/120/CE

VEHICLE TYPE: **PC35**

8

RACE-TECH STEEL END CAP

	9 HOMOL.
TITANIUM	71607PO
CARBON FIBRE	71607MO
ALUMINIUM	71607AO

71213MI
LOW MOUNT LINK PIPE FOR ORIGINAL COLLECTORS

Honda

CBR 600 F '11/13

VEHICLE TYPE: **PC41 var. 8 ver. 1**

9 e 5 2006/120/CE

RACING COLLECTORS
71446MI

⚠ * **ALL SILENCERS ALSO FIT TO ORIGINAL COLLECTORS. THEY ARE HOMOLOGATED WITHOUT DB-KILLER**

FULL SYSTEM
COMPETITION
TROPHY TITANIUM SILENCER
WITH CARBON END CAP AND dB-KILLER
STEEL LINK PIPE AND COLLECTORS
71105CKZ

9

8

9

9

2

3

3

X-KONE CARBON END CAP

	9 HOMOL.
NICHROM	71722XKI* € 329,00

TROPHY CARBON END CAP

	9 HOMOL.
TITANIUM	71641PRK*

TROPHY STEEL END CAP

	9 HOMOL.
TITANIUM	71641PR*

PRO-RACE STEEL END CAP

	9 HOMOL.
TITANIUM	71642PR*
NICHROM	71642PRI*

THUNDER CARBON CAP

	9 HOMOL.
TITANIUM	71722PK*
CARBON FIBRE	71722MK*
ALUMINIUM	71722AK*
ALUMINIUM "DARK"	71722AKN*

THUNDER STEEL CAP

	9 HOMOL.
TITANIUM	71722PO*
CARBON FIBRE	71722MO*
ALUMINIUM	71722AO*
ALUMINIUM "DARK"	71722AON*

Honda

CBR 600 RR '03/04

9e5 2006/120/CE

VEHICLE TYPE: **PC37A - PC37 var. 1 ver. 1**
PC37 var. 2 ver. 1

4

LINK PIPE
71250MI*

RACING COLLECTORS
71268MI

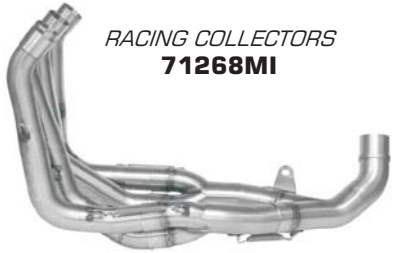

⚠ * **71250MI LINK PIPE FITS TO BOTH ARROW AND ORIGINAL COLLECTORS**

LAMBDA SENSOR CONVERTER
11015ME

INDY-RACE STEEL END CAP

	HOMOL.
TITANIUM	71667PO
CARBON FIBRE	71667MO

Honda

CBR 600 RR '05/06

9e5 2006/120/CE

VEHICLE TYPE: **PC37 var. 1 ver. 2**
PC37 var. 1 ver. 3

7

7

LINK PIPE
71305MI*

RACING COLLECTORS
71306MI

LAMBDA SENSOR CONVERTER
11015ME

⚠ * **71305MI LINK PIPE FITS TO BOTH ARROW AND ORIGINAL COLLECTORS**

MAXI RACE-TECH CARBON END CAP

	HOMOL.
TITANIUM	71693PK
CARBON FIBRE	71693MK

MAXI RACE-TECH STEEL END CAP

	HOMOL.
TITANIUM	71693PO
CARBON FIBRE	71693MO
ALUMINIUM	71693AO

Honda

CBR 600 RR '07/08

VEHICLE TYPE: **PC40 var. 1 ver. 1**

9e5 2006/120/CE

RACING COLLECTORS
71355MI

LINK PIPE
71354MI*

4

4

⚠ * **71354MI LINK PIPE FITS TO BOTH ARROW AND ORIGINAL COLLECTORS**

LAMBDA SENSOR CONVERTERS
11018ME

INDY-RACE CARBON END CAP

	9 HOMOL.
TITANIUM	71712PK
CARBON FIBRE	71712MK
ALUMINIUM	71712AK
ALUMINIUM "DARK"	71712AKN

INDY-RACE STEEL END CAP

	9 HOMOL.
TITANIUM	71712PO
CARBON FIBRE	71712MO
ALUMINIUM	71712AO
ALUMINIUM "DARK"	71712AON

Honda

CBR 600 RR '09/12

VEHICLE TYPE: **PC40 var. 2 ver. 1**
PC40 var. 4 ver. 1

9e5 2006/120/CE

RACING COLLECTORS
71392MI

LINK PIPE
71391MI*

4

4

INDY-RACE CARBON END CAP

	HOMOL.
TITANIUM	71712PK
CARBON FIBRE	71712MK
ALUMINIUM	71712AK
ALUMINIUM "DARK"	71712AKN

INDY-RACE STEEL END CAP

	HOMOL.
TITANIUM	71712PO
CARBON FIBRE	71712MO
ALUMINIUM	71712AO
ALUMINIUM "DARK"	71712AON

⚠ * **71391MI LINK PIPE FITS TO BOTH ARROW AND ORIGINAL COLLECTORS**

4

REPLICA «SBK» FULL SYSTEM
COMPETITION «EVO»

MAXI RACE-TECH TITANIUM SILENCER WITH CARBON END CAP AND dB-KILLER TITANIUM LINK PIPE STEEL COLLECTORS

COMPETITION "EVO"

	STEEL COLLECT.
FOR BIKE WITH ABS	71075CKR§
FOR BIKE WITHOUT ABS	71093CKR§

FULL SYSTEM
COMPETITION

INDY RACE TITANIUM SILENCER WITH CARBON END CAP AND dB-KILLER TITANIUM LINK PIPE - STEEL OR TITANIUM COLLECTORS

COMPETITION FOR BIKE WITHOUT ABS

	CARBON CAP
FULL TITANIUM	71076CKZ
STEEL COLLECT.	71075CKZ

COMPETITION FOR BIKE WITH ABS

	CARBON CAP
FULL TITANIUM	71083CKZ#
STEEL COLLECT.	71082CKZ#

⚠ § **NOT TO BE FITTED TO ORIGINAL PLATE HOLDER**

⚠ # **NOT TO BE FITTED TO RACING RADIATOR**

Honda

CBR 600 RR '13/14

9e5 2006/120/CE

VEHICLE TYPE: **PC40 var. 2 ver. 2**
PC40 var. 3 ver. 2
PC40 var. 4 ver. 2
PC40 var. 5 ver. 2

INDY-RACE
CARBON END CAP

	HOMOL.
TITANIUM	71807PK
CARBON FIBRE	71807MK
ALUMINIUM	71807AK
ALUMINIUM "DARK"	71807AKN

4

LINK PIPE
71491MI*

RACING COLLECTORS
71492MI

⚠ * **71491MI LINK PIPE FITS TO BOTH ARROW AND ORIGINAL COLLECTORS**

4

REPLICA «SBK» FULL SYSTEM
COMPETITION «EVO»
MAXI RACE-TECH TITANIUM SILENCER
WITH CARBON END CAP AND dB-KILLER
TITANIUM LINK PIPE
STEEL COLLECTORS

COMPETITION "EVO"

	STEEL COLLECT.
FOR BIKE WITH ABS	71075CKR#
FOR BIKE WITHOUT ABS	71093CKR#

FULL SYSTEM
COMPETITION
INDY RACE TITANIUM SILENCER WITH CARBON END CAP AND dB-KILLER
TITANIUM LINK PIPE - STEEL OR TITANIUM COLLECTORS

COMPETITION
FOR BIKE WITHOUT ABS

	CARBON CAP
FULL TITANIUM	71076CKZ#
STEEL COLLECT.	71075CKZ#

COMPETITION
FOR BIKE WITH ABS

	CARBON CAP
FULL TITANIUM	71083CKZ#§
STEEL COLLECT.	71082CKZ#§

⚠ # **NOT TO BE FITTED TO ORIGINAL PLATE HOLDER**

⚠ § **NOT TO BE FITTED TO RACING RADIATOR**

Honda

FMX 650 '05/08

VEHICLE TYPE: **RD12 var. 1 ver. 1**

RACING COLLECTORS
72069PD

3

STREET THUNDER
STEEL END CAP

	9 HOMOL.
TITANIUM	72607PO*
ALUMINIUM	72607AO*

⚠ * **SILENCERS ALSO FIT TO ORIGINAL COLLECTORS**

Honda

9 e 5 2006/120/CE

XL 650 V Transalp '00/07

VEHICLE TYPE: **RD10 - RD11 var. 1 ver. 1**

RACING COLLECTORS
72068PD

8

RACE-TECH
STEEL END CAP

	9 HOMOL.
TITANIUM	72606PO*
ALUMINIUM	72606AO*
ALUMINIUM "DARK"	72606AON*

⚠ * **SILENCERS ALSO FIT TO ORIGINAL COLLECTORS**

Honda

XL 700 V Transalp '08/13

VEHICLE TYPE: **RD13 var. 1 ver. 1**

9e5 2006/120/CE

RACE-TECH CARBON END CAP

	9 HOMOL.
ALUMINIUM	72610AK
ALUMINIUM "DARK"	72610AKN

RACE-TECH STEEL END CAP

	9 HOMOL.
TITANIUM	72610PO
ALUMINIUM	72610AO
ALUMINIUM "DARK"	72610AON

SILENCERS FOR ORIGINAL COLLECTORS

Honda

NC 700 D Integra '12/14

VEHICLE TYPE: **RC62 var. 1 ver. 1**

9e5 2006/120/CE

RACING COLLECTOR INTERCHANGEABLE WITH ORIGINAL ONE
71464MI

LINK PIPE
71463MI*

RACE-TECH STEEL END CAP

	9 HOMOL.
ALUMINIUM	71796AO
ALUMINIUM "DARK"	71796AON

RACE-TECH CARBON END CAP

	9 HOMOL.
TITANIUM	71796PK
CARBON FIBRE	71796MK
ALUMINIUM	71796AK
ALUMINIUM "DARK"	71796AKN

* **71463MI LINK PIPE FITS TO BOTH ARROW AND ORIGINAL COLLECTORS**

Honda

NC 700 S '12/14 - NC 700 X '12/13

9e5 2006/120/CE

VEHICLE TYPE: **RC61 var. 3 ver. 1** *VEHICLE TYPE:* **RC63 var. 5 ver. 1**

RACING COLLECTOR INTERCHANGEABLE WITH ORIGINAL ONE
71464MI

LINK PIPE
71463MI*

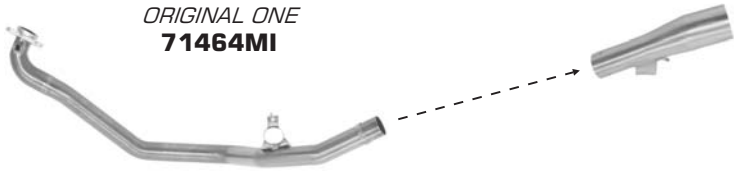

8

8

⚠ * **71463MI LINK PIPE FITS TO BOTH ARROW AND ORIGINAL COLLECTORS**

RACE-TECH STEEL END CAP

	9 HOMOL.
ALUMINIUM	71796AO
ALUMINIUM "DARK"	71796AON

RACE-TECH CARBON END CAP

	9 HOMOL.
TITANIUM	71796PK
CARBON FIBRE	71796MK
ALUMINIUM	71796AK
ALUMINIUM "DARK"	71796AKN

Honda

CrossRunner 800 '11/14

9e5 2006/120/CE

VEHICLE TYPE: **RC60 var. 1 ver. 1**

4

WORKS CARBON END CAP

	9 HOMOL.
TITANIUM	71789PK

8

RACE-TECH STEEL END CAP

	9 HOMOL.
TITANIUM	71788PO
ALUMINIUM	71788AO
ALUMINIUM "DARK"	71788AON

8

RACE-TECH CARBON END CAP

	9 HOMOL.
TITANIUM	71788PKK
ALUMINIUM	71788AK
ALUMINIUM "DARK"	71788AKN

SILENCERS FOR ORIGINAL COLLECTORS

Honda

XL 1000 Varadero '02/06

9e5 2006/120/CE

VEHICLE TYPE: **SD02 var. 1 ver. 1**

RACE-TECH STEEL END CAP

	9 HOMOL.
TITANIUM	72601PO
ALUMINIUM	72601AO

SILENCERS FOR ORIGINAL COLLECTORS

Honda

CBF 1000 - CBF 1000 ST '06/09

9e5 2006/120/CE

VEHICLE TYPE: **SC58 var. 1 ver. 1 - SC58 var. 1 ver. 2**

RACE-TECH STEEL END CAP

	9 HOMOL.
TITANIUM	71704PO
ALUMINIUM	71704AO

SILENCERS FOR ORIGINAL COLLECTORS

Honda

CBF 1000 - CBF 1000 ST '10/13

VEHICLE TYPE: **SC64 var. 1 ver. 1 - SC64 var. 2 ver. 1**
SC64 var. 3 ver. 1 - SC64 var. 4 ver. 1

9e5 2006/120/CE

71423MI
LINK PIPE FOR ORIGINAL COLLECTORS

71423KZ
HOMOLOGATED CATALYZED LINK PIPE FOR ORIGINAL COLLECTORS

8

8

4

10

RACE-TECH STEEL END CAP

	HOMOL.
TITANIUM	71764PO
ALUMINIUM	71764AO
ALUMINIUM "DARK"	71764AON

RACE-TECH CARBON END CAP

	HOMOL.
TITANIUM	71764PKK
ALUMINIUM	71764AK
ALUMINIUM "DARK"	71764AKN

TROPHY CARBON END CAP

	HOMOL.
TITANIUM	71765PK

PRO-RACING CARBON END CAP

	HOMOL.
NICHROM	71660RKI*

* **71660RKI SILENCER FITS TO ORIGINAL COLLECTORS WITHOUT LINK PIPE**

Honda

CB 1000 R '08/14

9e5 2006/120/CE

VEHICLE TYPE: **SC60 var. 1 ver. 1**

RACING COLLECTORS
71422MI

NON CATALYZED LINK PIPE
REPLACES CATALYZED
ORIGINAL LINK PIPE
71389MI#

CARBON FIBRE COVER FOR
CENTRAL LINK PIPE
11002MI

8

9

9

10

3

3

X-KONE CARBON END CAP

	HOMOL.
NICHROM	71732XKI*

TROPHY CARBON END CAP

	RACING
TITANIUM	71152PRK*

TROPHY STEEL END CAP

	RACING
TITANIUM	71152PR*

PRO-RACING CARBON CAP

	HOMOL.
NICHROM	71651RKI*

THUNDER CARBON CAP

	HOMOL.
TITANIUM	71732PK*
ALUMINIUM	71732AK*
ALUMINIUM "DARK"	71732AKN*

THUNDER STEEL CAP

	HOMOL.
TITANIUM	71732PO*
ALUMINIUM	71732AO*
ALUMINIUM "DARK"	71732AON*

 # 71389MI LINK PIPE ALSO FITS TO ORIGINAL COLLECTORS

*** ALL SILENCERS ALSO FIT TO ORIGINAL CATALYZED LINK PIPE**

Honda

CBR 1000 RR '04/07

9e5 2006/120/CE

VEHICLE TYPE: **SC57 var. 1 ver. 1 / 2**
SC57 var. 2 ver. 1

RACING COLLECTORS
71336MI

LINK PIPE
71335MI*

7

MAXI RACE-TECH
CARBON END CAP

	HOMOL.
TITANIUM	71684PK

7

MAXI RACE-TECH
STEEL END CAP

	HOMOL.
TITANIUM	71684P0
ALUMINIUM	71684A0

* **71335MI LINK PIPE FITS TO BOTH ARROW AND ORIGINAL COLLECTORS**

LAMBDA SENSOR CONVERTER
11016ME

Honda

CBR 1000 RR '08/11

VEHICLE TYPE: **SC59 var. 1 ver. 1**

9e5 2006/120/CE

RACING COLLECTORS
71404MI

5 HOMOLOGATED CATALYST
11014KZ

LINK PIPE FOR ORIGINAL COLLECTORS
71379MI

9

9

4

4

TROPHY CARBON END CAP

	RACING
TITANIUM	71147PRK

TROPHY STEEL END CAP

	RACING
TITANIUM	71147PR

INDY-RACE CARBON CAP

	9 HOMOL.
TITANIUM	71727PK
CARBON FIBRE	71727MK
ALUMINIUM	71727AK
ALUMINIUM "DARK"	71727AKN

INDY-RACE STEEL CAP

	9 HOMOL.
TITANIUM	71727PO
CARBON FIBRE	71727MO
ALUMINIUM	71727AO

FULL SYSTEM COMPETITION

TROPHY TITANIUM SILENCER WITH dB-KILLER
TITANIUM LINK PIPE
TITANIUM OR STEEL COLLECTORS

9

COMPETITION

	CARBON CAP
FULL TITANIUM	71111CKR#
STEEL COLLECT.	71103CKR#

dB-KILLER FOR GP2 SILENCER
11009DB

2

GP2 SILENCER

	RACING
FULL TITANIUM	71003GP*

⚠ # **IT FITS ONLY TO RACING REAR SETS**

⚠ * **SILENCER FOR ORIGINAL COLLECTORS**

Honda

CBR 1000 RR '12/13

9 e 5 2006/120/CE

VEHICLE TYPE: **SC59 var. 1 ver. 4**
SC59 var. 2 ver. 4
SC59 var. 3 ver. 3
SC59 var. 4 ver. 3

RACING COLLECTORS
71484MI

HOMOLOGATED CATALYST
11014KZ

LINK PIPE FOR ORIGINAL COLLECTORS
71379MI

9

9

4

4

TROPHY CARBON END CAP

	RACING
TITANIUM	71147PRK

TROPHY STEEL END CAP

	RACING
TITANIUM	71147PR

INDY-RACE CARBON CAP

	9 HOMOL.
TITANIUM	71727PK
CARBON FIBRE	71727MK
ALUMINIUM	71727AK
ALUMINIUM "DARK"	71727AKN

INDY-RACE STEEL CAP

	9 HOMOL.
TITANIUM	71727PO
CARBON FIBRE	71727MO
ALUMINIUM	71727AO

FULL SYSTEM COMPETITION

TROPHY TITANIUM SILENCER WITH dB-KILLER
TITANIUM LINK PIPE
STEEL OR TITANIUM COLLECTORS

9

COMPETITION

	CARBON CAP
FULL TITANIUM	71111CKR#
STEEL COLLECT.	71103CKR#

dB-KILLER FOR GP2 SILENCER
11009DB

2

GP2 SILENCER

	RACING
FULL TITANIUM	71003GP*

 # THEY FIT ONLY TO RACING REAR SETS

*** SILENCER FOR ORIGINAL COLLECTORS**

Honda

CBR 1000 RR '12/14

VEHICLE TYPE: **SC59 var. 1 ver. 4**
SC59 var. 2 ver. 4
SC59 var. 3 ver. 3
SC59 var. 4 ver. 3

FULL SYSTEM
HIGH VERSION
COMPETITION «EVO»

RACE-TECH TITANIUM SILENCER
WITH CARBON END CAP and dB-KILLER
TITANIUM LINK PIPE ø 48/60mm
TITANIUM or STEEL COLLECTORS

8

COMPETITION "EVO"

	CARBON CAP
FULL TITANIUM	**71127CZK***
STEEL COLLECT.	**71126CKZ***

Honda

CB 1100 '13/14

VEHICLE TYPE: **SC55 var. 2 ver. 1**

9 e 5
2006/120/CE

RACING COLLECTORS
71485MI*

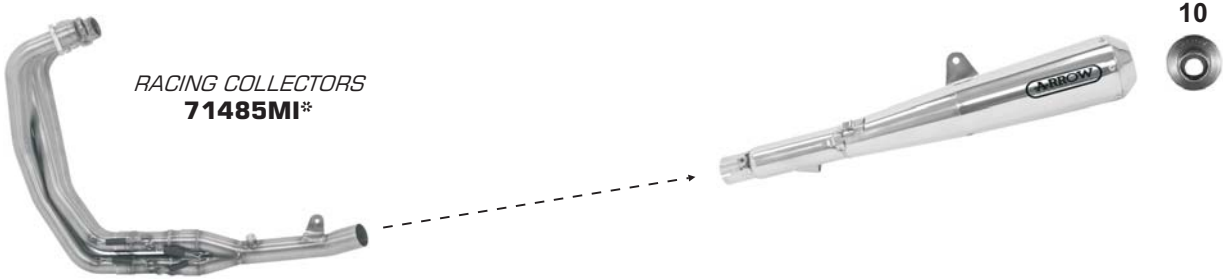

10

PRO-RACING
STEEL END CAP

	9 ***HOMOL.***
NICHROM	**71672PRI***

*** ALL THE COMPONENTS ARE INTERCHANGEABLE WITH THE ORIGINAL ONES**

Honda

CrossTourer 1200 '12/14

9e5 2006/120/CE

VEHICLE TYPE: **SC70 var. 1 ver. 1**

LINK PIPE FOR ORIGINAL COLLECTORS
71468MI

8

8

RACE-TECH CARBON END CAP

	9 HOMOL.
TITANIUM	71798PK
CARBON FIBRE	71798MK
ALUMINIUM	71798AK
ALUMINIUM "DARK"	71798AKN

RACE-TECH STEEL END CAP

	9 HOMOL.
ALUMINIUM	71798AO
ALUMINIUM "DARK"	71798AON

Honda

VFR 1200 '10/14

9e5 2006/120/CE

VEHICLE TYPE: **SC63 var. 1 ver. 1 / SC63 var. 2 ver. 1**
SC63 var. 3 ver. 1 / SC63 var. 4 ver. 1

8

RACE-TECH CARBON END CAP

	9 HOMOL.
TITANIUM	71762PKK
ALUMINIUM	71762AK
ALUMINIUM "DARK"	71762AKN

8

RACE-TECH STEEL END CAP

	9 HOMOL.
TITANIUM	71762PO
ALUMINIUM	71762AO
ALUMINIUM "DARK"	71762AON

SILENCERS FOR ORIGINAL COLLECTORS

Hyosung

Comet GT 250 '01/14

VEHICLE TYPE: **GT 250 B / D / E / F**

9e5 2006/120/CE

RACING COLLECTORS
71449MI

HOMOLOGATED CATALYST
11012KZ

3

STREET THUNDER CARBON END CAP

	9 HOMOL.
TITANIUM	71781PK
CARBON FIBRE	71781MK

3

STREET THUNDER STEEL END CAP

	9 HOMOL.
ALUMINIUM	71781AO
ALUMINIUM "DARK"	71781AON

HOMOLOGATED CATALYST FOR ORIGINAL COLLECTORS
11011KZ

3

STREET THUNDER CARBON END CAP

	9 HOMOL.
TITANIUM	71780PK*
ALUMINIUM	71780AK*

3

STREET THUNDER STEEL END CAP

	9 HOMOL.
ALUMINIUM	71780AO*
ALUMINIUM "DARK"	71780AON*

* **SILENCERS FOR ORIGINAL COLLECTORS - THE FITTING IS POSSIBLE ALSO WITHOUT ARROW CATALYTIC CONVERTER**

Husqvarna *TE 250 - TC 250 '09/11*

RACING THUNDER TITANIUM
75090TK*

3

TITANIUM COLLECTOR
72089PD*

✲ **ALL THE COMPONENTS ARE INTERCHANGEABLE WITH THE ORIGINAL ONES**

Husqvarna *TC 250 '12/13*

RACING
FULL SYSTEM
MX COMPETITION
"FULL TITANIUM"
75106TK

8

Husqvarna *TE 250 '12/13*

RACING *RACE-TECH ALUMINIUM WITH CARBON END CAP*
72037TAK*

8

RACING COLLECTOR
72108PD*

RACING
FULL SYSTEM MX COMPETITION "FULL TITANIUM"
75106TK

8

⚠ * **ALL THE COMPONENTS ARE INTERCHANGEABLE WITH THE ORIGINAL ONES**

Husqvarna *TE 310- TC 310 '10/12*

RACING *THUNDER TITANIUM*
75090TK*

3

TITANIUM COLLECTOR
72094PD*

⚠ * **ALL THE COMPONENTS ARE INTERCHANGEABLE WITH THE ORIGINAL ONES**

Husqvarna *TE 310 '13*

RACING COLLECTOR
72109PD*

RACING RACE-TECH ALUMINIUM WITH CARBON END CAP
72037TAK*

8

⚠ * **ALL THE COMPONENTS ARE INTERCHANGEABLE WITH THE ORIGINAL ONES**

Husqvarna *TC 450 - 510 '01/05*
SM 450 - 510 '04/05

3

RACING THUNDER TITANIUM
75013TT

3

RACING OFF-ROAD V2
75013TAK

3

RACING THUNDER ALUMINIUM
75013TA

SILENCERS FOR ORIGINAL COLLECTORS

Husqvarna *TE 450 - 510 '06*

3

RACING THUNDER TITANIUM
72008TT

SILENCERS FOR ORIGINAL COLLECTORS

Husqvarna *SM 450 R - 510 R '06*

3

RACING *THUNDER TITANIUM*
75039TT

SILENCERS FOR ORIGINAL COLLECTORS

Husqvarna *TC 250 - 450 - 510 '08*

RACING *THUNDER TITANIUM*
75049TT

3

RACING *OFF-ROAD V2*
75049TAK

3

RACING *THUNDER ALUMINIUM*
75049TA

3

SILENCERS FOR ORIGINAL COLLECTORS

Husqvarna *TC 450 '09/10*

RACING
FULL SYSTEM
MX COMPETITION
"FULL TITANIUM"
75093TK

3

Husqvarna *TC 449 '11/13*

8

RACING *RACE-TECH TITANIUM*
75105TK*

TITANIUM COLLECTOR
72097PD*

*** ALL THE COMPONENTS ARE INTERCHANGEABLE WITH THE ORIGINAL ONES**

Husqvarna *FE 450 '14*

3

RACING *THUNDER TITANIUM*
CARBON FIBRE END CAP
72042TK*

3

RACING *OFF-ROAD V2*
CARBON FIBRE END CAP
72042TAK*

3

RACING *THUNDER ALUMINIUM*
STEEL END CAP
72042TA*

9

RACING
FULL SYSTEM
MX COMPETITION
"FULL TITANIUM"
72043TK

STEEL RACING COLLECTOR
72118PD*

*** ALL THE COMPONENTS ARE INTERCHANGEABLE WITH THE ORIGINAL ONES**

Husqvarna *SMR 511 '11/13*

VEHICLE TYPE: **A6 var. 02 ver. AB**

8

RACE-TECH TITANIUM
HOMOLOGATED
72616PK

8

RACE-TECH ALUMINIUM
HOMOLOGATED
72616AK

SILENCERS FOR ORIGINAL COLLECTOR

8

RACING

FULL SYSTEM
MX COMPETITION
"FULL TITANIUM"
72030TK

Husqvarna *SM 610 '05/06*

RACING COLLECTORS
2 : 1
72071PD

RACING *THUNDER TITANIUM*
72006TT*

3

RACING *THUNDER ALUMINIUM*
72006TA*

3

*** SILENCERS ALSO FIT TO ORIGINAL COLLECTORS**

Husqvarna *SM 630 '10/11*

VEHICLE TYPE: **A4 var. 00 ver. AA**
A4 var. 00 ver. AB

RACING COLLECTORS
2:1:2
72092PD*

OFF-ROAD THUNDER CARBON END CAP

	HOMOL.
TITANIUM	72525TK*

*** ALL THE COMPONENTS ARE INTERCHANGEABLE WITH THE ORIGINAL ONES**

Husqvarna *Nuda 900 - Nuda 900 R '12/13*

9 e 5 2006/120/CE

VEHICLE TYPE: **A7 var. 00 ver. A**
A7 var. 00 ver. B

RACING COLLECTORS
71458MI*

WORKS CARBON END CAP

	HOMOL.
TITANIUM	71793PK*

*** ALL THE COMPONENTS ARE INTERCHANGEABLE WITH THE ORIGINAL ONES**

Kawasaki *KX 250 F '09/13*

3 *RACING THUNDER TITANIUM*
75075TK

3 *RACING OFF-ROAD V2*
75075TAK

3 *RACING THUNDER ALUMINIUM*
75075TA

SILENCERS FOR ORIGINAL COLLECTOR

RACING
FULL SYSTEM
MX COMPETITION
"FULL TITANIUM"
75076TK

3

Kawasaki *Ninja 250 R '09/12*

9 e 5 2006/120/CE

VEHICLE TYPE: **EX250K var. K ver. 1A**

RACING

FULL SYSTEM
REPLICA "TROFEO"
STREET THUNDER TITANIUM SILENCER
STEEL LINK PIPE AND COLLECTORS
71738PK

3

LINK PIPE
FOR ORIGINAL COLLECTORS
71402MI

5 **71402KZ**
HOMOLOGATED CATALYZED LINK PIPE
FOR ORIGINAL COLLECTORS

3 ***STREET THUNDER CARBON END CAP***

	9 HOMOL.
TITANIUM	71739PK
ALUMINIUM	71739AK
ALUMINIUM "DARK"	71739AKN

3 ***STREET THUNDER STEEL END CAP***

	9 HOMOL.
TITANIUM	71739PO
ALUMINIUM	71739AO
ALUMINIUM "DARK"	71739AON

Kawasaki *Ninja 250 '13/14*

9 e 5 2006/120/CE

VEHICLE TYPE: **EX250L var. L/M ver. 1B**

Ninja 300 '13/14

VEHICLE TYPE: **EX300A var. A ver. 1A**

FULL SYSTEM
COMPETITION
RACE-TECH TITANIUM SILENCER
WITH CARBON END CAP AND dB-KILLER
STEEL LINK PIPE AND COLLECTORS
71122CKZ#

RACING COLLECTORS
71476MI*

X-KONE CARBON CAP

	9 HOMOL.
NICHROM	71801XKI*

THUNDER CARBON CAP

	9 HOMOL.
TITANIUM	71801PK*
ALUMINIUM	71801AK*
ALUMINIUM "DARK"	71801AKN*

 # THE SYSTEM DOES NOT FIT TO ORIGINAL PASSENGER FOOT-PEGS. IT FITS ONLY TO RACING REAR SETS

*** ALL THE COMPONENTS ARE INTERCHANGEABLE WITH THE ORIGINAL ONES**

Kawasaki *KX 450 F '09/10*

3

RACING THUNDER TITANIUM
75073TK*

3

RACING OFF-ROAD V2
75073TAK*

3

RACING THUNDER ALUMINIUM
75073TA*

RACING
FULL SYSTEM
MX COMPETITION
"FULL TITANIUM"
75074TK

3

72085PD
STEEL RACING COLLECTOR

*** SILENCERS ALSO FIT TO ORIGINAL COLLECTOR**

Kawasaki *KX 450 F '12/13*

8

RACING RACE-TECH TITANIUM
75109TK*

RACING
TITANIUM COLLECTOR
72098PD

8

RACING RACE-TECH ALUMINIUM
75109TA*

RACING
STEEL COLLECTOR
72099PD

✲ SILENCERS ALSO FIT TO ORIGINAL COLLECTOR

Kawasaki *ZX-6R 636 '05/06*

VEHICLE TYPE: **ZX636C var. C ver. 1A**

CENTRAL LINK PIPE
71311MI*

7

RACING COLLECTORS
71312MI

MAXI RACE-TECH STEEL END CAP

	HOMOL.
TITANIUM	71695PO
ALUMINIUM	71695AO

✲ 71311MI LINK PIPE FITS TO BOTH ARROW AND ORIGINAL COLLECTORS

Kawasaki ZX-6R '09/14 - ZX-6R 636 '13/14

9e5 2006/120/CE

VEHICLE TYPE: **ZX600R var. R ver. 1A**
ZX636E var. E ver. 1 / 2
ZX636E var. F ver. 1 / 2

RACING COLLECTORS
71396MI

LINK PIPE FOR PRO-RACING SILENCER
71395MI

LINK PIPE FOR RACE-TECH SILENCER
71394MI

LINK PIPE FOR ORIGINAL COLLECTORS FOR RACE-TECH SILENCERS
71393MI

10

8

PRO-RACING CARBON CAP

	HOMOL.
NICHROM	71652RKI*

X-KONE CARBON END CAP

	HOMOL.
NICHROM	71734XKI*

⚠ * **SILENCERS ALSO FIT TO ORIGINAL COLLECTORS**

8

RACE-TECH CARBON CAP

	HOMOL.
TITANIUM	71734PKK
ALUMINIUM	71734AK
ALUMINIUM "DARK"	71734AKN

8

RACE-TECH STEEL CAP

	HOMOL.
TITANIUM	71734PO
ALUMINIUM	71734AO
ALUMINIUM "DARK"	71734AON

FULL SYSTEM
COMPETITION «EVO-2»
RACE-TECH TITANIUM SILENCER
WITH CARBON END CAP AND dB-KILLER
TITANIUM LINK PIPE ø45-60
TITANIUM OR STEEL
COLLECTORS

8

COMPETITION "EVO-2"

	CARBON CAP
FULL TITANIUM	71132CKZ
STEEL COLLECT.	71131CKZ

dB-KILLER FOR GP2 SILENCER
11009DB

2

GP2 SILENCERS

	RACING
FULL TITANIUM	71005GP§

⚠ § **SILENCER FOR ORIGINAL COLLECTORS**

Kawasaki *KLR 650 '01/05*

VEHICLE TYPE: **KL 650 B**

9e5 2006/120/CE

ENDURO ALUMILITE
HOMOLOGATED
72527AE

DB-KILLER
SPARK ARRESTER
FOR THUNDER and
ENDURO ALUMILITE SILENCERS
12003PD

3

THUNDER ALUMINIUN
HOMOLOGATED
72527TA

3

THUNDER ALUMINIUN
CARBON END CAP
HOMOLOGATED
72527TAK

2

PARIS DAKAR REPLICA
HOMOLOGATED
72527PD

DB-KILLER / SPARK ARRESTER
FOR PARIS DAKAR REPLICA SILENCER
12004PD

Kawasaki *ER-6N - ER-6F '05/11 - Versys 650 '07/13*

VEHICLE TYPE: **ER650A var. A ver. 11A**

VEHICLE TYPE: **LE650A var. A ver. 1A**

RACING COLLECTORS
71357MI

7

MAXI RACE-TECH
STEEL END CAP

	9 HOMOL.
TITANIUM	71698PO*
CARBON FIBRE	71698MO*
ALUMINIUM	71698AO*
ALUMINIUM "DARK"	71698AON*

*** SILENCERS ALSO FIT TO ORIGINAL COLLECTORS**

Kawasaki *ER-6N '12/13*

9 e 5 2006/120/CE

VEHICLE TYPE: **ER650E var. E ver. 1 / 2 / 3**
ER650E var. F ver. 1 / 2 / 3

RACING COLLECTORS
71459MI

HOMOLOGATED CATALYST
11010KZ

8

8

RACE-TECH STEEL END CAP

	9 HOMOL.
ALUMINIUM	71794AO
ALUMINIUM "DARK"	71794AON

RACE-TECH CARBON END CAP

	9 HOMOL.
TITANIUM	71794PK
CARBON FIBRE	71794MK
ALUMINIUM	71794AK
ALUMINIUM "DARK"	71794AKN

Kawasaki *Z 750 '04/06 - Z 750 S '05/06*

VEHICLE TYPE: **ZR750J var. J ver. 1A / 1B / 2A / 3A / 4A**
ZR750J var. K ver. 1A

LOW MOUNT LINK PIPE FOR ORIGINAL COLLECTORS
71279MI

8

8

LOW MOUNT LINK PIPE FOR ORIGINAL COLLECTORS
71347MI

2

PRO-RACE STEEL CAP

	9 HOMOL.
TITANIUM	71637PR
NICHROM	71637PRI

RACE-TECH CARBON CAP

	9 HOMOL.
ALUMINIUM	71706AK
ALUMINIUM "DARK"	71706AKN

RACE-TECH STEEL CAP

	9 HOMOL.
TITANIUM	71706PO
CARBON FIBRE	71706MO
ALUMINIUM	71706AO
ALUMINIUM "DARK"	71706AON

Kawasaki

Z 750 '07/12

VEHICLE TYPE: **ZR750L var. L ver. 1A**

Z 750 R '11/12

VEHICLE TYPE: **ZR750N var. N ver. 1A**

RACING COLLECTORS
71369MI

PRO-RACING CARBON CAP

	HOMOL.
NICHROM	71643PRI*

PRO-RACING STEEL CAP

	HOMOL.
NICHROM	71644PRI*

✲ **PRO-RACING SILENCERS ALSO FIT TO ORIGINAL COLLECTORS**

LINK PIPE FOR X-KONE SILENCER
71494MI

X-KONE CARBON END CAP

	HOMOL.
NICHROM	71723XKI

LINK PIPE FOR RACE-TECH SILENCER
71368MI

RACE-TECH CARBON CAP

	HOMOL.
TITANIUM	71723PK
CARBON FIBRE	71723MK#
ALUMINIUM	71723AK
ALUMINIUM "DARK"	71723AKN

RACE-TECH STEEL CAP

	HOMOL.
TITANIUM	71723PO
ALUMINIUM	71723AO
ALUMINIUM "DARK"	71723AON

Kawasaki *Z 800 E '13/14 (72 kW)*

9 e 5 2006/120/CE

VEHICLE TYPE: **ZR800A var. A ver. 3**
ZR800A var. B ver. 3

RACING COLLECTORS
71483MI

LINK PIPE
71482MI#

10

8

8

8

⚠ ✲ **PRO-RACING SILENCER ALSO FITS TO ORIGINAL COLLECTORS**

⚠ **# - 71482MI LINK PIPE FITS TO BOTH ARROW AND ORIGINAL COLLECTORS**

⚠ **NOTE - ALL PARTS FIT TO 72 kW VERSION ONLY**

PRO-RACING CARBON END CAP

	9 HOMOL.
NICHROM	71671RKI✲

X-KONE CARBON END CAP

	9 HOMOL.
NICHROM	71723XKI

RACE-TECH CARBON CAP

	9 HOMOL.
TITANIUM	71723PK
CARBON FIBRE	71723MK
ALUMINIUM	71723AK
ALUMINIUM "DARK"	71723AKN

RACE-TECH STEEL CAP

	9 HOMOL.
TITANIUM	71723PO
ALUMINIUM	71723AO
ALUMINIUM "DARK"	71723AON

Kawasaki *Z 800 '13/14*

9e5 2006/120/CE

VEHICLE TYPE: **ZR800A var. A ver. 1 / 2**
ZR800A var. B ver. 1 / 2

RACING COLLECTORS
71478MI

LINK PIPE
71477MI#

10

⚠ ✲ **PRO-RACING SILENCER ALSO FITS TO ORIGINAL COLLECTORS**

8

8

8

⚠ # **71477MI LINK PIPE FITS TO BOTH ARROW AND ORIGINAL COLLECTORS**

⚠ **NOTE - ALL PARTS DO NOT FIT TO 72 kW VERSION**

PRO-RACING CARBON END CAP

	9 HOMOL.
NICHROM	71669RKI✲

X-KONE CARBON END CAP

	9 HOMOL.
NICHROM	71723XKI

RACE-TECH CARBON CAP

	9 HOMOL.
TITANIUM	71723PK
CARBON FIBRE	71723MK
ALUMINIUM	71723AK
ALUMINIUM "DARK"	71723AKN

RACE-TECH STEEL CAP

	9 HOMOL.
TITANIUM	71723PO
ALUMINIUM	71723AO
ALUMINIUM "DARK"	71723AON

Kawasaki *Versys 1000 '12/14*

VEHICLE TYPE: **LZT00A var. A ver. 1**

9 e 5 2006/120/CE

RACING COLLECTORS
71461MI

LINK PIPE FOR ORIGINAL COLLECTORS
71460MI

8

8

RACE-TECH STEEL CAP

	9 HOMOL.
ALUMINIUM	71795AO
ALUMINIUM "DARK"	71795AON

RACE-TECH CARBON CAP

	9 HOMOL.
TITANIUM	71795PK
CARBON FIBRE	71795MK
ALUMINIUM	71795AK
ALUMINIUM "DARK"	71795AKN

Kawasaki *Z 1000 '03/06*

VEHICLE TYPE: **ZRT00A var. A ver. 1A**

RACING COLLECTORS
71348MI

LINK PIPE FOR RACE-TECH SILENCER
71349MI

LINK PIPE FOR PRO-RACING SILENCER
71350MI

8

2

RACE-TECH STEEL END CAP

	9 HOMOL.
TITANIUM	71709PO
CARBON FIBRE	71709MO
ALUMINIUM	71709AO

PRO-RACE STEEL END CAP

	RACING
TITANIUM	71138PR
NICHROM	71138PRI

Kawasaki *Z 1000 '07/09*

VEHICLE TYPE: **ZRT00B var. B ver. 1A**

STREET THUNDER
CARBON END CAP

	HOMOL.
TITANIUM	71724PK
ALUMINIUM	71724AK
ALUMINIUM "DARK"	71724AKN

STREET THUNDER
STEEL END CAP

	HOMOL.
TITANIUM	71724PO
ALUMINIUM	71724AO
ALUMINIUM "DARK"	71724AON

SILENCERS FOR ORIGINAL COLLECTORS

Kawasaki *Z 1000 '10/13*

9e5 2006/120/CE

VEHICLE TYPE: **ZRT00B var. B ver. 1A**
ZRT00B var. D ver. 1A

10

RACING COLLECTORS
4:2:2
71418MI

3

3

4

WORKS CARBON END CAP

	9 HOMOL.
TITANIUM	71756PK*

⚠ * **DOUBLE SILENCERS ALSO FIT TO ORIGINAL COLLECTORS**

8

8

RACING COLLECTORS
4:2:1
71419MI

4

PRO-RACING CARBON CAP

	9 HOMOL.
NICHROM	71657RKI*

THUNDER CARBON CAP

	9 HOMOL.
TITANIUM	71755PK*
CARBON FIBRE	71755MK*
ALUMINIUM	71755AK*
ALUMINIUM "DARK"	71755AKN*

THUNDER STEEL CAP

	9 HOMOL.
TITANIUM	71755PO*
CARBON FIBRE	71755MO*
ALUMINIUM	71755AO*
ALUMINIUM "DARK"	71755AON*

RACE-TECH CARBON CAP

	9 HOMOL.
TITANIUM	71758PK
CARBON FIBRE	71758MK

RACE-TECH STEEL CAP

	9 HOMOL.
ALUMINIUM	71758AO
ALUMINIUM "DARK"	71758AON

WORKS CARBON END CAP

	9 HOMOL.
TITANIUM	71757PK

Kawasaki *Z 1000 SX / Z 1000 SX Touring '11/14*

VEHICLE TYPE: **ZXT00G var. H ver. 1A**

9e5 2006/120/CE

RACING COLLECTORS
4:2:2
71418MI

3

3

10

4

STREET THUNDER CARBON END CAP

	HOMOL.
TITANIUM	71784PK*
CARBON FIBRE	71784MK*
ALUMINIUM	71784AK*
ALUMINIUM "DARK"	71784AKN*

STREET THUNDER STEEL END CAP

	HOMOL.
ALUMINIUM	71784AO*
ALUMINIUM "DARK"	71784AON*

PRO-RACING CARBON END CAP

	HOMOL.
NICHROM	71667RKI*

WORKS CARBON END CAP

	HOMOL.
TITANIUM	71785PK*

* **ALL SILENCERS ALSO FIT TO ORIGINAL COLLECTORS**

Kawasaki *ZX-10R '04/05*

9e5 2006/120/CE

VEHICLE TYPE: **ZXT00C var. C ver. 12A1 / 12A2 / 12B1 / 12B2**
ZXT00C var. C ver. 22A1 / 32A1 / 32A2

8

71276MI
LOW MOUNT LINK PIPE
FOR ORIGINAL COLLECTORS

RACE-TECH
STEEL END CAP

	9 HOMOL.
TITANIUM	71685PO
CARBON FIBRE	71685MO
ALUMINIUM	71685AO

Kawasaki *ZX-10R '06/07*

9e5 2006/120/CE

VEHICLE TYPE: **ZXT00D var. D ver. 11A / 11B / 21A / 31A**

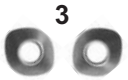

3

RACING
COLLECTORS
71331MI

THUNDER STEEL END CAP

	9 HOMOL.
TITANIUM	71700PO
ALUMINIUM	71700AO

LINK PIPE
1:2
71329MI#

NON CATALYZED LINK PIPE
REPLACES CATALYZED
ORIGINAL LINK PIPE
71330MI*

✲ **71330MI LINK PIPE ALSO FITS TO ORIGINAL SILENCERS**

\# **71329MI LINK PIPE ALSO FITS TO CATALYZED LINK PIPE**

Kawasaki *ZX-10R '08/10*

VEHICLE TYPE: **ZXT00E var. E ver. 11A**
ZXT00F var. F ver. 1A

9 e 5 2006/120/CE

LINK PIPE FOR PRO-RACING SILENCERS
71386MI

RACING COLLECTORS
71384MI

LINK PIPE FOR RACE-TECH SILENCERS
71385MI

LINK PIPE FOR ORIGINAL COLLECTORS FOR RACE-TECH SILENCERS
71383MI

dB-KILLER FOR GP2 SILENCER
11009DB

⚠ ✲ SILENCER ALSO FITS TO ORIGINAL COLLECTORS

PRO-RACING CARBON END CAP

	9 HOMOL.
NICHROM	71650RKI✲

RACE-TECH CARBON END CAP

	9 HOMOL.
TITANIUM	71728PKK
ALUMINIUM	71728AK
ALUMINIUM "DARK"	71728AKN

RACE-TECH STEEL END CAP

	9 HOMOL.
TITANIUM	71728PO
ALUMINIUM	71728AO
ALUMINIUM "DARK"	71728AON

GP2 SILENCER

	RACING
FULL TITANIUM	71004GP#

⚠ # SILENCER FOR ORIGINAL COLLECTORS

Kawasaki *ZX-10R '11/14*

VEHICLE TYPE: **ZXT00J var. J ver. 1A**

9e5 2006/120/CE

RACING COLLECTORS
71433MI

LINK PIPE FOR PRO-RACING SILENCERS
71435MI

10

PRO-RACING CARBON CAP

	HOMOL.
NICHROM	71662RKI*

* **71662RKI SILENCER FITS ALSO TO ORIGINAL CATALYST AND TO 71432MI NON CATALYZED LINK PIPE**

LINK PIPE FOR WORKS and RACE-TECH SILENCERS
71434MI

4

WORKS CARBON END CAP

	HOMOL.
TITANIUM	71771PK

NON CATALYZED LINK PIPE FOR ORIGINAL COLLECTORS FOR RACE-TECH AND WORKS SILENCERS
71431MI

8

RACE-TECH CARBON CAP

	HOMOL.
TITANIUM	71770PKK
CARBON FIBRE	71770MKK
ALUMINIUM	71770AK
ALUMINIUM "DARK"	71770AKN

NON CATALYZED LINK PIPE FOR ORIGINAL COLLECTORS FOR ORIGINAL AND PRO-RACING SILENCER
71432MI

LINK PIPE FOR ORIGINAL CATALYST FOR RACE-TECH AND WORKS SILENCERS
71430MI

8

RACE-TECH STEEL CAP

	HOMOL.
TITANIUM	71770PO
CARBON FIBRE	71770MO
ALUMINIUM	71770AO
ALUMINIUM "DARK"	71770AON

DB-KILLER FOR GP2 SILENCER
11009DB

2

GP2 SILENCER

	RACING
FULL TITANIUM	71007GP#

\# **SILENCER FOR ORIGINAL COLLECTORS**

Kawasaki *ZX-10R '11/14*

VEHICLE TYPE: **ZXT00J var. J ver. 1A**

REPLICA «SBK» FULL SYSTEM
COMPETITION «EVO»

RACE-TECH TITANIUM SILENCER
WITH CARBON END CAP AND dB-KILLER
TITANIUM ø52-65 LINK PIPE
TITANIUM OR STEEL COLLECTORS

COMPETITION "EVO"

	CARBON CAP
FULL TITANIUM	71135CKR
STEEL COLLECT.	71134CKR

8

FULL SYSTEM
COMPETITION

RACE-TECH TITANIUM SILENCER
WITH CARBON END CAP AND dB-KILLER
TITANIUM ø52-60 LINK PIPE
TITANIUM OR STEEL COLLECTORS

COMPETITION

	CARBON CAP
FULL TITANIUM	71135CKZ
STEEL COLLECT.	71134CKZ

KeeWay *RKV 125 '11/12*

9 e 5 2006/120/CE

VEHICLE TYPE: **K69 var. 1**

RACING COLLECTORS
51008MI

HOMOLOGATED
CATALYZED COLLECTOR
51008KZ

3

STREET THUNDER
CARBON END CAP

	9 HOMOL.
TITANIUM	51507PK

3

STREET THUNDER
STEEL END CAP

	9 HOMOL.
ALUMINIUM	51507AO
ALUMINIUM "DARK"	51507AON

KTM EXC 125 2T '08/12

1 RACING TITANIUM SILENCER
55052CR*

RACING EXHAUST
55048CR*

5 RACING TITANIUM SILENCER
55050CR*

⚠ * **ALL THE COMPONENTS ARE INTERCHANGEABLE WITH THE ORIGINAL ONES**

KTM SX 150 2T '08/11

1 RACING TITANIUM SILENCER
55052CR*

RACING EXHAUST
55053CR*

5 RACING TITANIUM SILENCER
55049CR*

⚠ * **ALL THE COMPONENTS ARE INTERCHANGEABLE WITH THE ORIGINAL ONES**

KTM SX 125 '08/11

1 RACING TITANIUM SILENCER
55052CR

RACING EXHAUST
55048CR

5 RACING TITANIUM SILENCER
55049CR

⚠ * **ALL THE COMPONENTS ARE INTERCHANGEABLE WITH THE ORIGINAL ONES**

KTM

Duke 125 '11/14 - Duke 200 '12/14

9e5 2006/120/CE

VEHICLE TYPE: **KTM IS DUKE var. A1**
KTM IS DUKE var. A2
KTM IS DUKE var. A3

VEHICLE TYPE: **KTM IS DUKE var. A4**

HOMOLOGATED CATALYST
11013KZ

LINK PIPE FOR ORIGINAL COLLECTORS
51010MI

2

3

3

PRO-RACE STEEL END CAP

	9 HOMOL.
NICHROM	51501PRI

THUNDER STEEL CAP

	9 HOMOL.
ALUMINIUM	51510AO
ALUMINIUM "DARK"	51510AON

THUNDER CARBON CAP

	9 HOMOL.
TITANIUM	51510PK
ALUMINIUM	51510AK
ALUMINIUM "DARK"	51510AKN

KTM

EXC 250 - EXC 300 2T '05/09

1

RACING *TITANIUM SILENCER*
55051CR

RACING EXHAUST
52035SU

KTM EXC-F 250 '14

3

RACING *THUNDER TITANIUM CARBON END CAP*
72040TK

3

RACING *OFF-ROAD V2 CARBON END CAP*
72031TAK

3

RACING *THUNDER ALUMINIUM STEEL END CAP*
72031TA

8

RACING *FULL SYSTEM MX COMPETITION "FULL TITANIUM"*
72032TK

SILENCERS FOR ORIGINAL COLLECTORS

KTM SX-F 250 '10

3

RACING *THUNDER TITANIUM CARBON END CAP*
75062TK*

3

RACING *OFF-ROAD V2 CARBON END CAP*
75062TAK*

3

RACING *THUNDER ALUMINIUM STEEL END CAP*
75062TA*

3

RACING *FULL SYSTEM MX COMPETITION "FULL TITANIUM"*
75095TK

⚠ * **SILENCERS FOR ORIGINAL COLLECTOR**

KTM SX-F 250 '11

3

RACING *THUNDER TITANIUM CARBON END CAP*
75062TK*

3

RACING *OFF-ROAD V2 CARBON END CAP*
75062TAK*

3

RACING *THUNDER ALUMINIUM STEEL END CAP*
75062TA*

8

RACING
FULL SYSTEM MX COMPETITION «EVO» "FULL TITANIUM"
75095TKR

⚠ ✲ **SILENCERS FOR ORIGINAL COLLECTOR**

KTM SX-F 250 '14

3

RACING *THUNDER TITANIUM CARBON END CAP*
75116TK*

3

RACING *OFF-ROAD V2 CARBON END CAP*
75062TAK*

3

RACING *THUNDER ALUMINIUM STEEL END CAP*
75062TA*

9

RACING
FULL SYSTEM MX COMPETITION "FULL TITANIUM"
75120TK

⚠ ✲ **SILENCERS FOR ORIGINAL COLLECTOR**

KTM EXC 350 '12

3 RACING THUNDER TITANIUM CARBON END CAP **72031TK***

3 RACING OFF-ROAD V2 CARBON END CAP **72031TAK***

3 RACING THUNDER ALUMINIUM STEEL END CAP **72031TA***

8 RACING FULL SYSTEM MX COMPETITION "FULL TITANIUM" **72032TK**

STEEL RACING COLLECTOR **72101PD***

*** ALL THE COMPONENTS ARE INTERCHANGEABLE WITH THE ORIGINAL ONES**

KTM EXC-F 350 '13

3 RACING THUNDER TITANIUM CARBON END CAP **72040TK***

3 RACING OFF-ROAD V2 CARBON END CAP **72031TAK***

3 RACING THUNDER ALUMINIUM STEEL END CAP **72031TA***

8 RACING FULL SYSTEM MX COMPETITION "FULL TITANIUM" **72041TK**

STEEL RACING COLLECTOR **72115PD***

*** ALL THE COMPONENTS ARE INTERCHANGEABLE WITH THE ORIGINAL ONES**

KTM SX-F 350 '11/12

3

RACING *THUNDER TITANIUM CARBON END CAP*
75062TK*

3

RACING *OFF-ROAD V2 CARBON END CAP*
75062TAK*

3

RACING *THUNDER ALUMINIUM STEEL END CAP*
75062TA*

8

RACING
FULL SYSTEM MX COMPETITION "FULL TITANIUM"
75096TK

⚠ ✲ **SILENCER FOR ORIGINAL COLLECTOR**

KTM SX-F 350 '13/14

3

RACING *THUNDER TITANIUM CARBON END CAP*
75116TK*

3

RACING *OFF-ROAD V2 CARBON END CAP*
75062TAK*

3

RACING *THUNDER ALUMINIUM STEEL END CAP*
75062TA*

9

RACING
FULL SYSTEM MX COMPETITION "FULL TITANIUM"
75112TK

⚠ ✲ **SILENCER FOR ORIGINAL COLLECTOR**

KTM

Duke 390 '13/14

9e5 2006/120/CE

VEHICLE TYPE: **KTM IS DUKE var. C1**
KTM IS DUKE var. C2
KTM IS DUKE var. C3

HOMOLOGATED CATALYST
11010KZ

LINK PIPE FOR ORIGINAL COLLECTORS
71600MI

8

3

3

X-KONE CARBON CAP

	HOMOL.
NICHROM	71813XKI

THUNDER STEEL CAP

	HOMOL.
ALUMINIUM	71813AO
ALUMINIUM "DARK"	71813AON

THUNDER CARBON CAP

	HOMOL.
TITANIUM	71813PK
ALUMINIUM	71813AK
ALUMINIUM "DARK"	71813AKN

KTM

SX 450 F '08

3

RACING THUNDER TITANIUM CARBON END CAP
75062TK*

3

RACING OFF-ROAD V2 CARBON END CAP
75062TAK*

3

RACING THUNDER ALUMINIUM STEEL END CAP
75062TA*

TITANIUM COLLECTOR
72082PD

⚠ * **ALL THE COMPONENTS ARE INTERCHANGEABLE WITH THE ORIGINAL ONES**

KTM SMR 450 '12

RACING

FULL SYSTEM
MX COMPETITION
"FULL TITANIUM"
75119TK

9

KTM SMR 450 '13

3

RACING *THUNDER TITANIUM*
CARBON END CAP
75116TK*

3

RACING *OFF-ROAD V2*
CARBON END CAP
75062TAK*

3

RACING *THUNDER ALUMINIUM*
STEEL END CAP
75062TA*

RACING

FULL SYSTEM
MX COMPETITION
"FULL TITANIUM"
75117TK

9

✲ SILENCERS FOR ORIGINAL COLLECTOR

KTM

EXC 450 '13 - ECX 500 '12/13

3

RACING THUNDER TITANIUM CARBON END CAP
75116TK*

3

RACING OFF-ROAD V2 CARBON END CAP
75062TAK*

3

RACING THUNDER ALUMINIUM STEEL END CAP
75062TA*

8

RACING
FULL SYSTEM MX COMPETITION "FULL TITANIUM"
72036TK

RACING STEEL COLLECTOR
72107PD*

⚠ * **ALL THE COMPONENTS ARE INTERCHANGEABLE WITH THE ORIGINAL ONES**

KTM

Duke 690 '08/11

VEHICLE TYPE: **DUKE var. A2**

9e5 2006/120/CE

RACING COLLECTOR
71470MI

5 HOMOLOGATED CATALYST
11010KZ

8

8

RACE-TECH CARBON END CAP

	9 HOMOL.
TITANIUM	71799PK
ALUMINIUM	71799AK
ALUMINIUM "DARK"	71799AKN

RACE-TECH STEEL END CAP

	9 HOMOL.
ALUMINIUM	71799AO
ALUMINIUM "DARK"	71799AON

KTM

Duke 690 '12/13

9e5 2006/120/CE

VEHICLE TYPE: **690 DUKE var. A1 / A2 / A3**
690 DUKE var. B1 / B2 / B3

LINK PIPE FOR ORIGINAL COLLECTORS
ONLY FOR X-KONE SILENCERS
71486MI

RACING COLLECTORS
71487MI

HOMOLOGATED CATALYST
11010KZ

8

8

8

X-KONE CARBON CAP

	9 HOMOL.
TITANIUM	71799XK
NICHROM	71799XKI

RACE-TECH STEEL CAP

	9 HOMOL.
ALUMINIUM	71799AO
ALUMINIUM "DARK"	71799AON

RACE-TECH CARBON CAP

	9 HOMOL.
TITANIUM	71799PK
ALUMINIUM	71799AK
ALUMINIUM "DARK"	71799AKN

KTM

990 Adventure '08/12

9e5 2006/120/CE

VEHICLE TYPE: **LC8 var. B ver. 1**
LC8 var. C ver. 1

HOMOLOGATED CATALYSTS
11006KZ

8

RACE-TECH CARBON END CAP

	9 HOMOL.
TITANIUM	71763PK
ALUMINIUM	71763AK

SILENCERS FOR ORIGINAL COLLECTORS

KTM

950 SM '06/09 - 990 SM - 990 SMR '08/12

9e5 2006/120/CE

VEHICLE TYPE: **LC8 SM var. A ver. A2**

VEHICLE TYPE: **LC8 var. B2**

CENTRAL LINK PIPE
71414MI*

RACING COLLECTORS
71415MI#

8

RACE-TECH CARBON END CAP

	9 HOMOL.
TITANIUM	72613PK
ALUMINIUM	72613AK

5 **71414KZ***

HOMOLOGATED CATALYZED CENTRAL LINK PIPE

*** 71414KZ LINK PIPE FITS ALSO TO ORIGINAL COLLECTORS**

 # COLLECTORS ARE INTERCHANGEABLE WITH ORIGINAL ONES, THEY ALSO FIT TO «SMT» MODEL

KTM

1190 Adventure R '13/14

9e5 2006/120/CE

VEHICLE TYPE: **B2 ADVENTURE**

RACING COLLECTORS
71495MI

5

CATALYTIC HOMOLOGATED COLLECTORS
71495KZ

7

MAXI RACE-TECH CARBON END CAP

	9 HOMOL.
TITANIUM	71809PK*
ALUMINIUM	71809AK*

*** SILENCERS ALSO FIT TO ORIGINAL COLLECTOR**

Kymco *XCITING 400 '12/14*

VEHICLE TYPE: **D6 var. 00 ver. 00/10**

9e5 2006/120/CE

HOMOLOGATED CATALYST
11017KZ

RACING COLLECTOR
73011MI

8

RACE-TECH CARBON END CAP

	HOMOL.
TITANIUM	73511PK
ALUMINIUM	73511AK

Moto Guzzi *Griso 1200 '07/13*

VEHICLE TYPE: **LS var. E ver. 00**

TITANIUM RACING COLLECTORS
71475MI*

TITANIUM LINK PIPE
71474MI*

10

PRO-RACING STEEL CAP POLISHED FINISH

	HOMOL.
NICHROM	71669PRI*

10

PRO-RACING STEEL CAP BRUSHED FINISH

	HOMOL.
NICHROM	71670PRI*

*** ALL THE COMPONENTS ARE INTERCHANGEABLE WITH THE ORIGINAL ONES**

MV Agusta *F3 675 '12/14*

VEHICLE TYPE: **F3**

9e5 2006/120/CE

STAINLESS STEEL LINK PIPE
FOR ORIGINAL COLLECTORS
71471MI*

8

8

RACE-TECH
CARBON END CAP

	HOMOL.
TITANIUM	71800PK
ALUMINIUM "DARK"	71800AKN

RACE-TECH
STEEL END CAP

	HOMOL.
ALUMINIUM "DARK"	71800AON

TITANIUM LINK PIPE
FOR ORIGINAL COLLECTORS
71467MI*

9

9

TROPHY
CARBON END CAP

	RACING
TITANIUM	71197PRK

TROPHY
STEEL END CAP

	RACING
TITANIUM	71197PR

*** 71467MI AND 71471MI LINK PIPES ALSO FIT TO MV AGUSTA RACING COLLECTORS**

MV Agusta *F4 1000 '04/07*

VEHICLE TYPE: **F5 var. 11 ver. BA**

9e5 2006/120/CE

RACING COLLECTORS
71339MI

NON CATALYZED LINK PIPE
REPLACES CATALYZED
ORIGINAL LINK PIPE
71338MI*

3

STREET THUNDER
CARBON END CAP

	9 HOMOL.
TITANIUM	71703PK§
CARBON FIBRE	71703MK#

3

STREET THUNDER
STEEL END CAP

	9 HOMOL.
TITANIUM	71703PO§
CARBON FIBRE	71703MO#

 # NOT TO BE FITTED TO ORIGINAL LINK PIPE

§ TO BE FITTED TO ORIGINAL LINK PIPE

✲ 71338MI LINK PIPE ALSO FITS TO ORIGINAL SILENCERS

FULL SYSTEM
COMPETITION

RACE-TECH TITANIUM SILENCER
TITANIUM MID-PIPE ø50/60mm.
TITANIUM OR STEEL COLLECTORS

3

COMPETITION

	CARBON CAP	*STEEL CAP*
FULL TITANIUM	71036CK	71036CP
STEEL COLLECT.	71051CK	71051CP

MV Agusta *Brutale 750 '03/06 - Brutale 910 '05/06*

9e5 2006/120/CE

VEHICLE TYPE: **F4 var. 10 ver. AA**
F4 var. 11 ver. AA

VEHICLE TYPE: **F4 var. 11 ver. AC**

RACING COLLECTORS
71326MI

NON CATALYZED LINK PIPE
71304MI*

2

1

ROUND-SIL STEEL END CAP

	HOMOL.
TITANIUM	71665PR
CARBON FIBRE	71665MC#

 # NOT TO BE FITTED TO ORIGINAL CATALYZED LINK PIPE

✲ COLLECTORS AND LINK PIPES ARE INTERCHANGEABLE WITH ORIGINAL ONES

RACING COLLECTORS
71326MI

LOW MOUT LINK PIPE
71353MI*

3

3

THUNDER CARBON CAP

	RACING
TITANIUM	71110PK
CARBON FIBRE	71110MK
ALUMINIUM	71110AK
ALUMINIUM "DARK"	71110AKN

THUNDER STEEL CAP

	RACING
TITANIUM	71110PO
CARBON FIBRE	71110MO
ALUMINIUM	71110AO
ALUMINIUM "DARK"	71110AON

✲ 71353MI LINK PIPE FITS TO BOTH ORIGINAL AND ARROW COLLECTORS ELIMINATES ORIGINAL CATALYST

MV Agusta *Brutale 910 '07/08*

VEHICLE TYPE: **F4 var. 11 ver. AC**

9e5 2006/120/CE

RACING COLLECTORS
71326MI

NON CATALYZED LINK PIPE
71304MI

2

1

ROUND-SIL STEEL END CAP

	HOMOL.
TITANIUM	71665PR
CARBON FIBRE	71665MC#

⚠ **# NOT TO BE FITTED TO ORIGINAL CATALYZED LINK PIPE**

RACING COLLECTORS
71326MI

LOW MOUNT LINK PIPE
71353MI

3

3

THUNDER CARBON CAP

	RACING
TITANIUM	71110PK
CARBON FIBRE	71110MK
ALUMINIUM	71110AK
ALUMINIUM "DARK"	71110AKN

THUNDER STEEL CAP

	RACING
TITANIUM	71110PO
CARBON FIBRE	71110MO
ALUMINIUM	71110AO
ALUMINIUM "DARK"	71110AON

MV Agusta *Brutale 1090 RR '10/12 Brutale 990 R '09/12 Brutale 920 '11/12*

RACING COLLECTORS
71428MI

RACING COLLECTORS FOR ORIGINAL SILENCERS
71450MI

10

PRO-RACING CARBON CAP

	RACING
NICHROM	71161RKI

3

3

THUNDER CARBON CAP

	RACING
TITANIUM	71110PK
CARBON FIBRE	71110MK
ALUMINIUM	71110AK
ALUMINIUM "DARK"	71110AKN

THUNDER STEEL CAP

	RACING
TITANIUM	71110PO
CARBON FIBRE	71110MO
ALUMINIUM	71110AO
ALUMINIUM "DARK"	71110AON

Peugeot *Metropolis 400 '13/14*

VEHICLE TYPE: **X1 var. AA ver. AA**

8

RACE-TECH CARBON END CAP

	9 *HOMOL.*
TITANIUM	73510PK
ALUMINIUM	73510AK

RACING COLLECTOR
53045MI

5

CATALYTIC HOMOLOGATED COLLECTOR
53045KZ

8

REFLEX 2.0 BLACK STEEL CAP

	9 *HOMOL.*
NICHROM	53545STP

SILENCERS FOR ORIGINAL COLLECTOR

Sherco *SE 2.5i-F '11*

3

RACING *THUNDER TITANIUM CARBON END CAP*
72021TK

3

RACING *OFF-ROAD V2 CARBON END CAP*
72021TAK

3

RACING *THUNDER ALUMINIUM STEEL END CAP*
72021TA

3

RACING
FULL SYSTEM MX COMPETITION "FULL TITANIUM"
72022TK

SILENCERS FOR ORIGINAL COLLECTOR

Sherco *SE 4.5i-F '12/13*

3

RACING *THUNDER TITANIUM CARBON END CAP*
72023TK

3

RACING *OFF-ROAD V2 CARBON END CAP*
72023TAK

3

RACING *THUNDER ALUMINIUM STEEL END CAP*
72023TA

3

RACING
FULL SYSTEM MX COMPETITION "FULL TITANIUM"
72024TK

SILENCERS FOR ORIGINAL COLLECTOR

Suzuki *RM-Z 250 E '10/13*

3

RACING *THUNDER TITANIUM CARBON END CAP*
72033TK

3

RACING *OFF-ROAD V2 CARBON END CAP*
72033TAK

8

RACING *FULL SYSTEM MX COMPETITION "FULL TITANIUM"*
72034TK

SILENCERS FOR ORIGINAL COLLECTOR

Suzuki *RM-Z 250 '10/13*

3

RACING *THUNDER TITANIUM CARBON END CAP*
75085TK

3

RACING *OFF-ROAD V2 CARBON END CAP*
75085TAK

3

RACING *THUNDER ALUMINIUM STEEL END CAP*
75085TA

3

RACING *FULL SYSTEM MX COMPETITION "FULL TITANIUM"*
75086TK

8

RACING *FULL SYSTEM MX COMPETITION «EVO» "FULL TITANIUM"*
75086TKR

SILENCERS FOR ORIGINAL COLLECTOR

Suzuki *DR-Z 400 SM '05/07*

3

RACING *THUNDER TITANIUM STEEL END CAP*
72005TT*

3

RACING *OFF-ROAD V2 CARBON END CAP*
72005TAK*

3

RACING *THUNDER ALUMINIUM STEEL END CAP*
72005TA*

STAINLESS STELL RACING COLLECTORS
72070PD

* **SILENCERS ALSO FIT TO ORIGINAL COLLECTOR**

Suzuki *RM-Z 450 '10*

3

RACING *THUNDER TITANIUM CARBON END CAP*
75063TK

3

RACING *OFF-ROAD V2 CARBON END CAP*
75063TAK

3

RACING *THUNDER ALUMINIUM STEEL END CAP*
75063TA

RACING
FULL SYSTEM MX COMPETITION "FULL TITANIUM"
75094TK

3

SILENCERS FOR ORIGINAL COLLECTOR

Suzuki RM-Z 450 '11/13

3

RACING THUNDER TITANIUM CARBON END CAP
75107TK

3

RACING OFF-ROAD V2 CARBON END CAP
75107TAK

3

RACING THUNDER ALUMINIUM CARBON END CAP
75107TA

SILENCERS FOR ORIGINAL COLLECTOR

3

FULL SYSTEM MX COMPETITION "FULL TITANIUM"
75094TK

8

FULL SYSTEM MX COMPETITION «EVO» "FULL TITANIUM"
75094TKR

9

FULL SYSTEM MX COMPETITION «EVO-2» "FULL TITANIUM"
75111TK

Suzuki GSR 600 '06/11

9e5 2006/120/CE

VEHICLE TYPE: **WVB9 1**

1

NON CATALYZED LINK PIPE
REPLACES CATALYZED
ORIGINAL LINK PIPE
71328MI#

ROUND-SIL STEEL END CAP

	9 HOMOL.
TITANIUM	71629PR*
CARBON FIBRE	71629MC*

* **SILENCERS ALSO FIT TO ORIGINAL CATALYZED LINK PIPE**

 # LINK PIPE ALSO FITS TO ORIGINAL SILENCERS

Suzuki

GSX-R 600 i.e. '06/07

VEHICLE TYPE: **WVCE 1-1**

RACING COLLECTORS
71334MI

LINK PIPE FOR ORIGINAL COLLECTORS
71333MI

3

3

2

9

9

STREET THUNDER CARBON END CAP

	HOMOL.
TITANIUM	71702PK
CARBON FIBRE	71702MK

STREET THUNDER STEEL END CAP

	HOMOL.
TITANIUM	71702PO
CARBON FIBRE	71702MO
ALUMINIUM	71702AO
ALUMINIUM "DARK"	71702AON

PRO-RACE STEEL END CAP

	HOMOL.
TITANIUM	71632PR
NICHROM	71632PRI

TROPHY CARBON END CAP

	RACING
TITANIUM	71134PRK

TROPHY STEEL END CAP

	RACING
TITANIUM	71134PR

Suzuki

GSX-R 600 i.e. '08/10

VEHICLE TYPE: **WVCV 1-1**

9 e 5 2006/120/CE

RACING COLLECTORS
71334MI

71382MI
LINK PIPE FOR THUNDER SILENCERS

LINK PIPE FOR THUNDER SILENCERS
FOR ORIGINAL COLLECTORS
71381MI

FULL SYSTEM
COMPETITION
THUNDER TITANIUM SILENCER
WITH CARBON END CAP AND dB-KILLER
TITANIUM LINK PIPE ø50/60mm.
STEEL OR TITANIUM COLLECTORS

COMPETITION

	CARBON CAP	STEEL CAP
FULL TITANIUM	71068CKZ	71068CPZ
STEEL COLLECT.	71067CKZ	71067CPZ

10

PRO-RACING for ARROW COLLECT.

	HOMOL.
CARBON END CAP	71648RKI
STEEL END CAP	71648PRI

3

THUNDER CARBON CAP

	HOMOL.
TITANIUM	71729PK
CARBON FIBRE	71729MK
ALUMINIUM	71729AK
ALUMINIUM "DARK"	71729AKN

3

THUNDER STEEL CAP

	HOMOL.
TITANIUM	71729PO
CARBON FIBRE	71729MO
ALUMINIUM	71729AO
ALUMINIUM "DARK"	71729AON

10

PRO-RACING for ORIGINAL COLLECT.

	HOMOL.
CARBON END CAP	71649RKI*
STEEL END CAP	71649PRI*

* **SILENCERS FOR ORIGINAL COLLECTORS**

Suzuki

GSX-R 600 i.e. '11/14

VEHICLE TYPE: **WVC3 1-1**

9e5 2006/120/CE

RACING COLLECTORS
71439MI

9

71440MI
LINK PIPE FOR THUNDER AND WORKS SILENCERS

LINK PIPE FOR THUNDER AND WORKS SILENCERS FOR ORIGINAL COLLECTORS
71438MI

2

TROPHY CARBON END CAP

	HOMOL.
TITANIUM	71773PK*

GP2 SILENCER

	RACING
FULL TITANIUM	71006GP*

dB-KILLER FOR GP2 SILENCER
11009DB

10

PRO-RACING CARBON CAP

	HOMOL.
NICHROM	71663RKI*

10

3

3

4

3

FULL SYSTEM COMPETITION

THUNDER TITANIUM SILENCER WITH CARBON END CAP AND dB-KILLER TITANIUM LINK PIPE ø50/60mm. STEEL OR TITANIUM COLLECTORS

COMPETITION

	CARBON CAP
FULL TITANIUM	71108CKZ
STEEL COLLECT.	71107CKZ

PRO-RACING for ARROW COLLECT.

	HOMOL.
NICHROM	71664RKI

THUNDER CARBON CAP

	HOMOL.
TITANIUM	71772PK
CARBON FIBRE	71772MK
ALUMINIUM	71772AK
ALUMINIUM "DARK"	71772AKN

THUNDER STEEL CAP

	HOMOL.
ALUMINIUM	71772AO
ALUMINIUM "DARK"	71772AON

WORKS CARBON END CAP

	HOMOL.
TITANIUM	71774PK

⚠ * **SILENCERS FOR ORIGINAL COLLECTORS**

Suzuki

AN 650 Burgman '02/06

VEHICLE TYPE: **WVBU-1**

RACING COLLECTORS
71270MI

7

MAXI RACE-TECH STEEL END CAP

	HOMOL.
TITANIUM	71663PO
ALUMINIUM	71663AO

Suzuki

DL 650 V-Strom '04/14

9e5 2006/120/CE

VEHICLE TYPE: **WVB1 1-1 / B1 1-1**
WVC7 1-1 / C7 1-1

RACING COLLECTORS
71454MI

HOMOLOGATED CATAYST
11008KZ

8

RACE-TECH CARBON END CAP

	HOMOL.
TITANIUM	72605PK
ALUMINIUM	72605AK
ALUMINIUM "DARK"	72605AKN

NOTE - SYSTEM DOES NOT FIT TO CENTRAL STAND

Suzuki

GSF 650 Bandit / Bandit S '07/13

9 e 5 2006/120/CE

VEHICLE TYPE: **WVCZ 1-1 / 2-1 / 3-1 / 4-1**
WVCZ 5-1 / 6-1 / 7-1 / 8-1
WVCJ 1-1 / WVCJ 2-1

RACING COLLECTORS
71374MI

LINK PIPE
71372MI*

10

8

8

⚠ * **71372MI LINK PIPE ALSO FITS TO ORIGINAL COLLECTORS**

PRO-RACING CARBON CAP

	9 HOMOL.
NICHROM	71656RKI*

RACE-TECH CARBON CAP

	9 HOMOL.
TITANIUM	71725PKK
ALUMINIUM	71725AK
ALUMINIUM "DARK"	71725AKN

RACE-TECH STEEL CAP

	9 HOMOL.
TITANIUM	71725PO
ALUMINIUM	71725AO
ALUMINIUM "DARK"	71725AON

Suzuki

SVF 650 Gladius '09/14

9 e 5 2006/120/CE

VEHICLE TYPE: **WVCX var. 1 ver. 1 / WVCX var. 2 ver. 1**
WVCX var. 3 ver. 1 / WVCX var. 4 ver. 1

10

PRO-RACING CARBON END CAP

	9 HOMOL.
NICHROM	71655RKI

3

STREET THUNDER CARBON END CAP

	9 HOMOL.
TITANIUM	71742PK

3

STREET THUNDER STEEL END CAP

	9 HOMOL.
TITANIUM	71742PO
ALUMINIUM	71742AO
ALUMINIUM "DARK"	71742AON

SILENCERS FOR ORIGINAL COLLECTORS

Suzuki

GSR 750 '11/14

9e5 2006/120/CE

VEHICLE TYPE: **C5 var. 1 ver. 1**

LINK PIPE FOR PRO-RACING, X-KONE and ORIGINAL SILENCERS
71445MI#

RACING COLLECTORS
71443MI

 # 71445MI LINK PIPE FITS ALSO TO ORIGINAL SILENCER

71444MI
LINK PIPE FOR RACE-TECH, WORKS AND TROPHY SILENCERS

71442MI
LINK PIPE FOR ORIGINAL COLLECTORS FOR RACE-TECH, WORKS and TROPHY SILENCERS

10

8

✲ 71660RKI and 71776XKI SILENCERS FIT TO ORIGINAL COLLECTORS WITH NO ADAPTORS

4

9

8

8

PRO-RACING CARBON CAP

	9 HOMOL.
NICHROM	71665RKI ✲

X-KONE CARBON END CAP

	9 HOMOL.
NICHROM	71776XKI ✲

WORKS CARBON END CAP

	9 HOMOL.
TITANIUM	71777PK

TROPHY CARBON END CAP

	9 HOMOL.
TITANIUM	71778PK

RACE-TECH STEEL CAP

	9 HOMOL.
ALUMINIUM	71776AO
ALUMINIUM "DARK"	71776AON

RACE-TECH CARBON CAP

	9 HOMOL.
TITANIUM	71776PKK
ALUMINIUM	71776AK
ALUMINIUM "DARK"	71776AKN

Suzuki

GSX-R 750 i.e. '06/07

VEHICLE TYPE: **WVCF 1-1**

RACING COLLECTORS
71334MI

LINK PIPE FOR ORIGINAL COLLECTORS
71333MI

3

3

2

9

9

STREET THUNDER CARBON END CAP

	HOMOL.
TITANIUM	71702PK
CARBON FIBRE	71702MK

STREET THUNDER STEEL END CAP

	HOMOL.
TITANIUM	71702PO
CARBON FIBRE	71702MO
ALUMINIUM	71702AO
ALUMINIUM "DARK"	71702AON

PRO-RACE STEEL END CAP

	HOMOL.
TITANIUM	71632PR
NICHROM	71632PRI

TROPHY CARBON END CAP

	RACING
TITANIUM	71134PRK

TROPHY STEEL END CAP

	RACING
TITANIUM	71134PR

Suzuki

GSX-R 750 i.e. '08/10

VEHICLE TYPE: **WVCW 1-1**

9e5 2006/120/CE

RACING COLLECTORS
71334MI

71382MI
LINK PIPE FOR THUNDER SILENCERS

LINK PIPE FOR THUNDER SILENCERS
FOR ORIGINAL COLLECTORS
71381MI

FULL SYSTEM
COMPETITION
THUNDER TITANIUM SILENCER
WITH CARBON END CAP AND dB-KILLER
TITANIUM LINK PIPE ø50/60mm.
STEEL OR TITANIUM COLLECTORS

COMPETITION

	CARBON CAP	STEEL CAP
FULL TITANIUM	71068CKZ	71068CPZ
STEEL COLLECT.	71067CKZ	71067CPZ

10

PRO-RACING for ARROW COLLECT.

	HOMOL.
CARBON END CAP	71648RKI
STEEL END CAP	71648PRI

3

THUNDER CARBON CAP

	HOMOL.
TITANIUM	71729PK
CARBON FIBRE	71729MK
ALUMINIUM	71729AK
ALUMINIUM "DARK"	71729AKN

3

THUNDER STEEL CAP

	HOMOL.
TITANIUM	71729PO
CARBON FIBRE	71729MO
ALUMINIUM	71729AO
ALUMINIUM "DARK"	71729AON

10

PRO-RACING for ORIGINAL COLLECT.

	HOMOL.
CARBON END CAP	71649RKI*
STEEL END CAP	71649PRI*

* **SILENCERS FOR ORIGINAL COLLECTORS**

Suzuki

GSX-R 750 i.e. '11/14

VEHICLE TYPE: **WVC4 1-1**

9 e 5 2006/120/CE

RACING COLLECTORS
71439MI

9

71440MI
LINK PIPE FOR THUNDER AND WORKS SILENCERS

10

3

3

4

LINK PIPE FOR THUNDER AND WORKS SILENCERS FOR ORIGINAL COLLECTORS
71438MI

TROPHY CARBON END CAP

	9 HOMOL.
TITANIUM	71773PK*

2

GP2 SILENCER

	RACING
FULL TITANIUM	71006GP*

dB-KILLER FOR GP2 SILENCER
11009DB

10

PRO-RACING CARBON CAP

	9 HOMOL.
NICHROM	71663RKI*

FULL SYSTEM COMPETITION

THUNDER TITANIUM SILENCER
WITH CARBON END CAP AND dB-KILLER
TITANIUM LINK PIPE ø50/60mm.
STEEL OR TITANIUM COLLECTORS

3

COMPETITION

	CARBON CAP
FULL TITANIUM	71108CKZ
STEEL COLLECT.	71107CKZ

PRO-RACING for ARROW COLLECT.

	9 HOMOL.
NICHROM	71664RKI

THUNDER CARBON CAP

	9 HOMOL.
TITANIUM	71772PK
CARBON FIBRE	71772MK
ALUMINIUM	71772AK
ALUMINIUM "DARK"	71772AKN

THUNDER STEEL CAP

	9 HOMOL.
ALUMINIUM	71772AO
ALUMINIUM "DARK"	71772AON

WORKS CARBON END CAP

	9 HOMOL.
TITANIUM	71774PK

⚠ * **SILENCERS FOR ORIGINAL COLLECTORS**

Suzuki

V-Strom 1000 '14

VEHICLE TYPE: **DD var. 1 ver. 1**

9e5 2006/120/CE

7

MAXI RACE-TECH CARBON END CAP

	HOMOL.
TITANIUM	71816PK
ALUMINIUM	71816AK
ALUMINIUM "DARK"	71816AKN

SILENCERS FOR ORIGINAL COLLECTORS

Suzuki

GSX-R 1000 i.e.'05/06

VEHICLE TYPE: **WVB6 var. 1 ver. 1 / WVB6 var. 1 ver. 2**
WVB6 var. 2 ver. 1

RACING COLLECTORS
71308MI

HIGH MOUNT LINK PIPE
71309MI

LOW MOUNT LINK PIPE
71310MI

71313MI
HIGH MOUNT LINK PIPE
FOR ORIGINAL COLLECTORS

71307MI
LOW MOUNT LINK PIPE
FOR ORIGINAL COLLECTORS

8

RACE-TECH STEEL END CAP

	HOMOL.
TITANIUM	71694POR
CARBON FIBRE	71694MOR

Suzuki

GSX-R 1000 i.e. '07/08

VEHICLE TYPE: **WVCL var. 1 ver. 1**

9 e 5 2006/120/CE

RACING COLLECTORS
71366MI

1 : 2 MID-PIPE
FOR ORIGINAL COLLECTORS
71365MI#

 # 71365MI LINK PIPE ELIMINATES ORIGINAL CATALYST AND FITS TO ORIGINAL SILENCERS

STREET THUNDER CARBON END CAP

	9 HOMOL.
TITANIUM	71721PK*
CARBON FIBRE	71721MK*
ALUMINIUM	71721AK*
ALUMINIUM "DARK"	71721AKN*

STREET THUNDER STEEL END CAP

	9 HOMOL.
TITANIUM	71721PO*
CARBON FIBRE	71721MO*
ALUMINIUM	71721AO*
ALUMINIUM "DARK"	71721AON*

PRO-RACE STEEL END CAP

	9 HOMOL.
TITANIUM	71640PR**
NICHROM	71640PRI**

*** SILENCERS ALSO FIT TO ORIGINAL CATALYZED LINK PIPE**

**** TITANIUM AND NICHROM SILENCERS ALSO FIT TO ORIGINAL CATALYZED LINK PIPE AND REQUIRE REMOVAL OF PASSENGER FOOT-PEGS**

Suzuki

GSX-R 1000 i.e. '09/11

VEHICLE TYPE: **WVCY var. 1 ver. 1**
WVCY var. 2 ver. 1

9 e 5 2006/120/CE

RACING COLLECTORS
71400MI

1 ÷ 2 MID-PIPE
FOR ORIGINAL COLLECTORS
71399MI#

10

10

3

3

 # 71399MI LINK PIPE ELIMINATES ORIGINAL CATALYST AND FITS TO ORIGINAL SILENCERS

*** SILENCERS ALSO FIT TO ORIGINAL CATALYZED LINK PIPE**

PRO-RACING CARBON CAP

	HOMOL.
NICHROM	71653RKI*

PRO-RACING STEEL CAP

	HOMOL.
NICHROM	71653PRI*

THUNDER CARBON CAP

	HOMOL.
TITANIUM	71736PK*
CARBON FIBRE	71736MK*
ALUMINIUM	71736AK*
ALUMINIUM "DARK"	71736AKN*

THUNDER STEEL CAP

	HOMOL.
TITANIUM	71736PO*
CARBON FIBRE	71736MO*
ALUMINIUM	71736AO*
ALUMINIUM "DARK"	71736AON*

REPLICA SBK FULL SYSTEM
COMPETITION «EVO»

X-KONE TITANIUM SILENCER
TITANIUM LINK PIPE ø45/54mm.
TITANIUM OR STEEL COLLECTORS

COMPETITION "EVO"

	CARBON CAP
FULL TITANIUM	71085CKR
STEEL COLLECT.	71084CKR

X-KONE SILENCERS

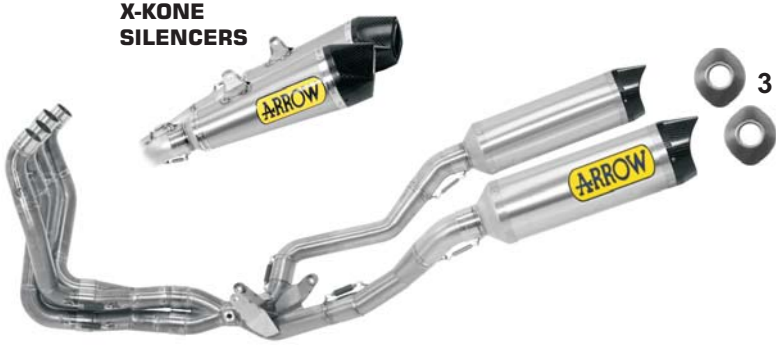

3

FULL SYSTEM
COMPETITION

THUNDER TITANIUM SILENCER
TITANIUM LINK PIPE ø45/54mm.
TITANIUM OR STEEL COLLECTORS

COMPETITION

	CARBON CAP
FULL TITANIUM	71085CKZ
STEEL COLLECT.	71084CKZ

Suzuki

GSX-R 1000 i.e. '12/14

VEHICLE TYPE: **WVCY 1-1 / WVCY 2-1**

9 e 5 2006/120/CE

RACING COLLECTORS
71462MI

4

8

8

2

⚠ ✲ **ALL SILENCERS ALSO FIT TO ORIGINAL COLLECTORS**

FULL SYSTEM COMPETITION

WORKS TITANIUM SILENCER WITH CARBON END CAP AND dB-KILLER TITANIUM LINK PIPE ø50/60mm. STEEL OR TITANIUM COLLECTORS

4

COMPETITION

	CARBON CAP
FULL TITANIUM	71113CKZ
STEEL COLLECT.	71112CKZ

WORKS CARBON END CAP

	HOMOL.
TITANIUM	71792PK✲

RACE-TECH STEEL CAP

	HOMOL.
ALUMINIUM	71791AO✲
ALUMINIUM "DARK"	71791AON✲

RACE-TECH CARBON CAP

	HOMOL.
TITANIUM	71791PK✲
CARBON FIBRE	71791MK✲
ALUMINIUM	71791AK✲
ALUMINIUM "DARK"	71791AKN✲

GP2 SILENCER

	RACING
FULL TITANIUM	71008GP✲

dB-KILLER FOR GP2 SILENCER
11009DB

Suzuki

GSF 1250 Bandit - Bandit S '07/13

VEHICLE TYPE: **WVCH 1-1/1-2/2-1/2-2/3-1/3-2/4-1/4-2**

GSX 1250 FA '09/13

VEHICLE TYPE: **WVCH 5-1**

RACING COLLECTORS
71374MI

LINK PIPE
71372MI*

10

8

8

⚠ * **71372MI LINK PIPE ALSO FITS TO ORIGINAL COLLECTORS**

PRO-RACING CARBON CAP

	HOMOL.
NICHROM	71656RKI*

RACE-TECH CARBON CAP

	HOMOL.
TITANIUM	71725PKK
ALUMINIUM	71725AK
ALUMINIUM "DARK"	71725AKN

RACE-TECH STEEL CAP

	HOMOL.
TITANIUM	71725PO
ALUMINIUM	71725AO
ALUMINIUM "DARK"	71725AON

Suzuki

GSX 1300 R Hayabusa '99/06

VEHICLE TYPE: **WVA1 -1-1**

RACING COLLECTORS
71361MI

8

RACE-TECH STEEL END CAP

	HOMOL.
TITANIUM	71718PO
ALUMINIUM	71718AO

7

MAXI RACE-TECH STEEL END CAP

	HOMOL.
TITANIUM	71717PO
CARBON FIBRE	71717MO
ALUMINIUM	71717AO

SILENCERS FOR ORIGINAL COLLECTORS

Triumph *Daytona 675 '06/09*

9e5 2006/120/CE

VEHICLE TYPE: **D67LC / SMTTMD10666**

INDY RACE
STEEL END CAP

	9 HOMOL.
TITANIUM	71711PO
CARBON FIBRE	71711MO

SILENCERS FOR ORIGINAL COLLECTORS

Triumph *Speed Triple 1050i '05/06*

VEHICLE TYPE: **515NJ**

1 : 2 LINK PIPE
71325MI

ROUND-SIL
STEEL END CAP

	9 HOMOL.
TITANIUM	71627PR
CARBON FIBRE	71627MC

Triumph *Speed Triple 1050i '07/10*

VEHICLE TYPE: **515NJ var. 1 / 2 / 3**

1 : 2 LINK PIPE
71370MI

ROUND-SIL
STEEL END CAP

	HOMOL.
TITANIUM	**71627PR**
CARBON FIBRE	**71627MC**

Yamaha *BW'S 125 '10/13*

VEHICLE TYPE: **SE55 var. 1 ver. 0**

9 e 5 2006/120/CE

RACING COLLECTOR
53034MI

HOMOLOGATED CATALYST
11013KZ

STREET THUNDER
STEEL END CAP

	HOMOL.
ALUMINIUM	**53501AO**
ALUMINIUM "DARK"	**53501AON**

STREET THUNDER
CARBON END CAP

	HOMOL.
TITANIUM	**53501PK**
ALUMINIUM	**53501AK**
ALUMINIUM "DARK"	**53501AKN**

Yamaha *WR 125 R / X '09/14*

9e5 2006/120/CE

VEHICLE TYPE: **DE07 var. I ver. i / ii**
DE07 var. II ver. i / ii

RACING COLLECTOR
NON CATALYZED
52003MI#

3

3

STREET THUNDER
CARBON END CAP

	9 HOMOL.
TITANIUM	52505PK*
ALUMINIUM	52505AK*
ALUMINIUM "DARK"	52505AKN*

STREET THUNDER
STEEL END CAP

	9 HOMOL.
ALUMINIUM	52505AO*
ALUMINIUM "DARK"	52505AON*

 # 52003MI ALSO FITS TO ORIGINAL SILENCER

*** SILENCERS ALSO FIT TO ORIGINAL COLLECTOR**

Yamaha *YZF-R 125 '08/14*

9e5 2006/120/CE

VEHICLE TYPE: **RE06 var. I ver. I / II**

RACING COLLECTOR
51003MI

HOMOLOGATED CATALYZED COLLECTOR
51003KZ

3

3

STREET THUNDER
CARBON END CAP

	9 HOMOL.
TITANIUM	51503PK
ALUMINIUM	51503AK
ALUMINIUM "DARK"	51503AKN

STREET THUNDER
STEEL END CAP

	9 HOMOL.
TITANIUM	51503PO
ALUMINIUM	51503AO
ALUMINIUM "DARK"	51503AON

Yamaha *T 135 Crypton X '07/11*

VEHICLE TYPE: **UG01 var. I ver. i / ii**

9e5 2006/120/CE

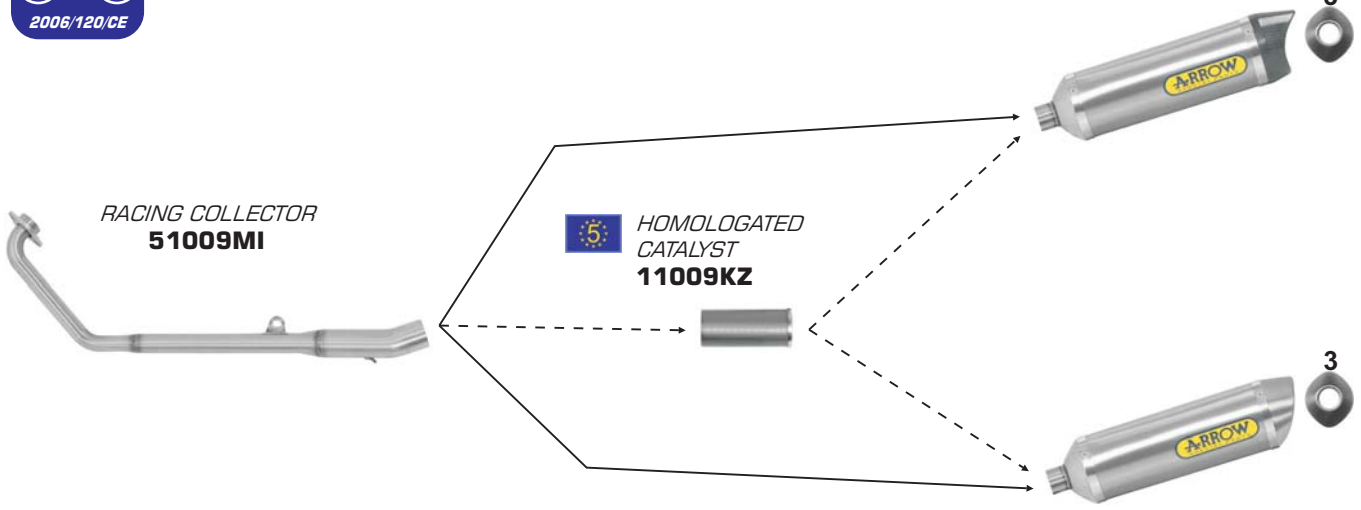

STREET THUNDER CARBON END CAP

	HOMOL.
TITANIUM	51508PK
ALUMINIUM	51508AK

STREET THUNDER STEEL END CAP

	HOMOL.
TITANIUM	51508PO
ALUMINIUM	51508AO
ALUMINIUM "DARK"	51508AON

Yamaha *FZ16 - Fazer 16 '08/12*

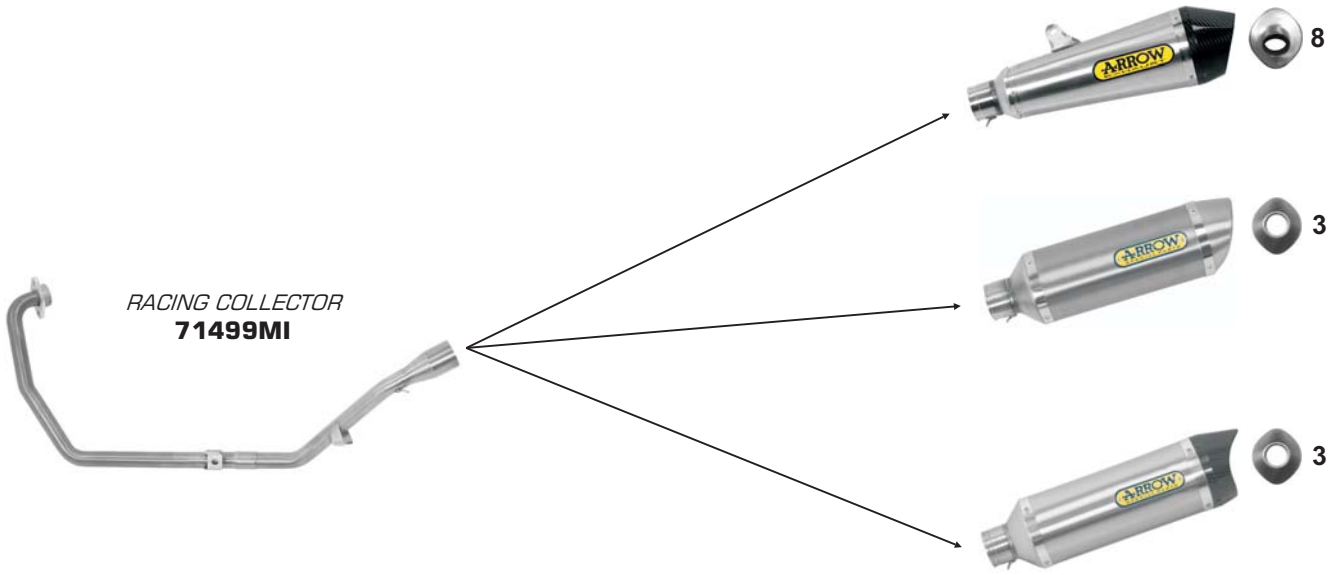

X-KONE CARBON CAP

	RACING
NICHROM	51512XKI

THUNDER STEEL CAP

	RACING
ALUMINIUM	51512AO
ALUMINIUM "DARK"	51512AON

THUNDER CARBON CAP

	RACING
TITANIUM	51512PK
ALUMINIUM	51512AK
ALUMINIUM "DARK"	51512AKN

Yamaha *WR 250 R '08/11 - WR 250 X '09/11*

3

RACING THUNDER TITANIUM STEEL END CAP
72011TT

3

RACING THUNDER ALUMINIUM STEEL END CAP
72011TA

STAINLESS STEEL RACING COLLECTOR
72083PD

Yamaha *WR 250 F '12/13*

3

RACING THUNDER TITANIUM CARBON END CAP
72035TK*

3

RACING OFF-ROAD V2 CARBON END CAP
72035TAK*

3

RACING THUNDER ALUMINIUM STEEL END CAP
72035TA*

STAINLESS STEEL RACING COLLECTOR
72106PD*

*** ALL THE COMPONENTS ARE INTERCHANGEABLE WITH THE ORIGINAL ONES**

Yamaha *YZ 250 F '10/13*

3

RACING *THUNDER TITANIUM CARBON END CAP*
75080TK

3

RACING *OFF-ROAD V2 CARBON END CAP*
75080TAK

3

RACING *THUNDER ALUMINIUM STEEL END CAP*
75080TA

3 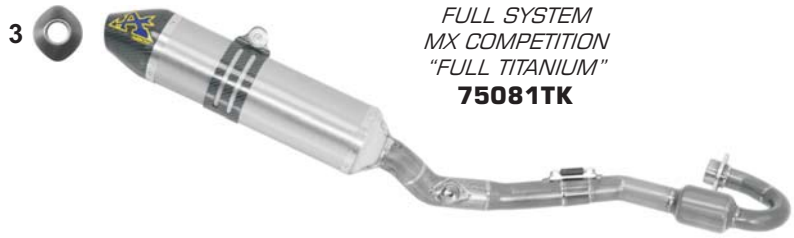

RACING
FULL SYSTEM MX COMPETITION "FULL TITANIUM"
75081TK

9 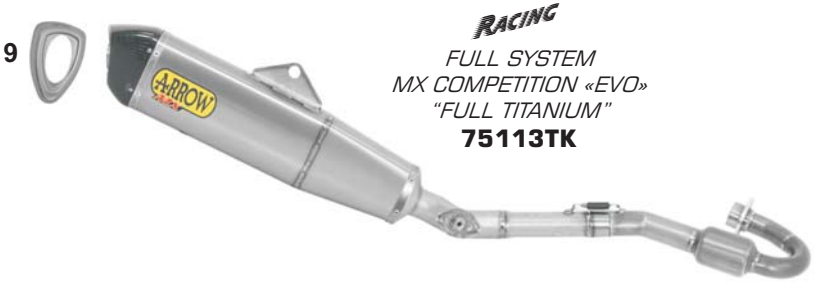

RACING
FULL SYSTEM MX COMPETITION «EVO» "FULL TITANIUM"
75113TK

SILENCERS FOR ORIGINAL COLLECTORS

Yamaha *YZ 250 F '14*

3

RACING *THUNDER TITANIUM CARBON END CAP*
75127TK*

3

RACING *OFF-ROAD V2 CARBON END CAP*
75127TAK*

3

RACING *THUNDER ALUMINIUM STEEL END CAP*
75127TA*

9

RACING
FULL SYSTEM MX COMPETITION
75128TK

RACING
STAINLESS STEEL COLLECTOR
72117PD*

✲ **COMPONENTS INTERCHANGEABLE WITH ORIGINAL ONES**

Yamaha *X-Max 400 '13*

VEHICLE TYPE: **SH07 var. A ver. 01**

9e5 2006/120/CE

8

RACE-TECH CARBON END CAP

	9 HOMOL.
TITANIUM	**73509PK**
ALUMINIUM	**73509AK**

SILENCERS FOR ORIGINAL COLLECTOR

Yamaha *YZ 450 F '10/13*

8

RACING RACE-TECH TITANIUM
75087TK

8

RACING
FULL SYSTEM
MX COMPETITION
"FULL TITANIUM"
75088TK

SILENCERS FOR ORIGINAL COLLECTOR

Yamaha *YZ 450 F '14*

3

RACING THUNDER TITANIUM CARBON END CAP
75122TK*

3

RACING OFF-ROAD V2 CARBON END CAP
75122TAK*

3

RACING THUNDER ALUMINIUM STEEL END CAP
75122TA*

9

RACING FULL SYSTEM MX COMPETITION
75123TK

RACING STAINLESS STEEL COLLECTOR
72114PD*

* **COMPONENTS INTERCHANGEABLE WITH ORIGINAL ONES**

Yamaha *YP 500 T-Max '01/07*

VEHICLE TYPE: **SJ01 var. I ver. I / II / III / VI / VII / JX**
SJ03 var. I ver. I / II / III / V / VI / VII

RACING COLLECTORS
71267MI

7

RACING COLLECTORS
71342MI

3

3

* **VARIATOR ROLLS ARE INCLUDED**

MAXI RACE-TECH STEEL CAP

	9 HOMOL.
TITANIUM	71623PO*
ALUMINIUM	71623AO*

THUNDER CARBON CAP

	9 HOMOL.
TITANIUM	71705PK*

THUNDER STEEL CAP

	9 HOMOL.
TITANIUM	71705PO*
ALUMINIUM	71705AO*
ALUMINIUM "DARK"	71705AON*

Yamaha *YP 500 T-Max '08/11*

9e5 2006/120/CE

VEHICLE TYPE: **SJ06 var. I ver. I / II / III / V / VI / VII**
SJ06 var. II ver. VIII / IX / X

RACING COLLECTORS
71390MI*

HOMOLOGATED CATALYZED COLLECTORS
71390KZ*

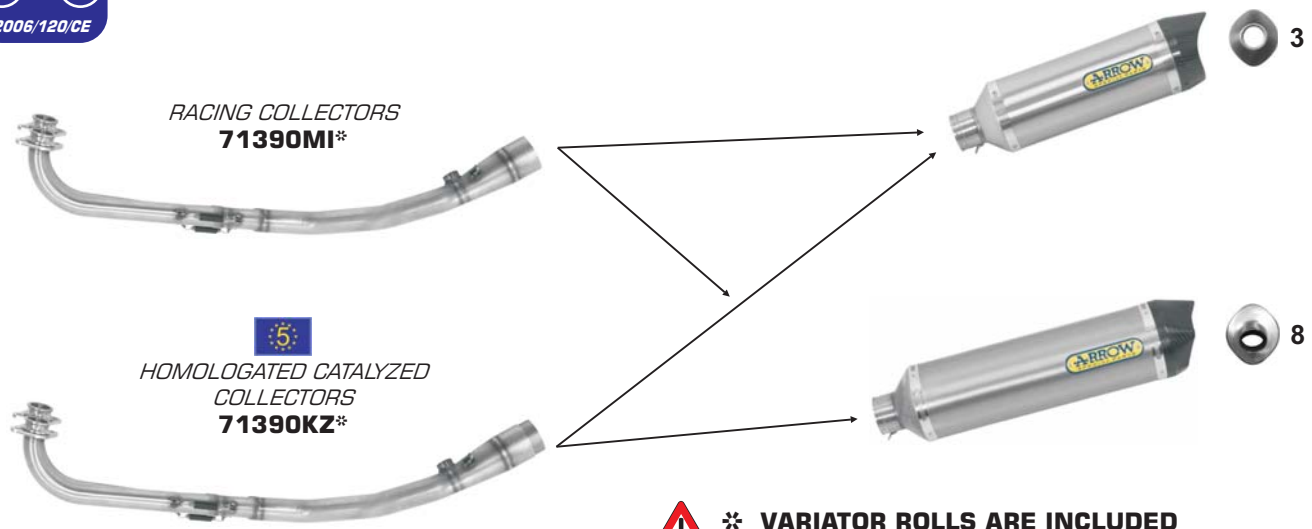

⚠ * **VARIATOR ROLLS ARE INCLUDED**

STREET THUNDER CARBON END CAP

	9 HOMOL.
TITANIUM	71753PK

RACE-TECH CARBON END CAP

	9 HOMOL.
TITANIUM	73507PK
ALUMINIUM	73507AK
ALUMINIUM "DARK"	73507AKN

Yamaha *T-Max 530 '12/14*

9e5 2006/120/CE

VEHICLE TYPE: **SJ09 var. I ver. i / ii / iv / v / vi**

RACING COLLECTORS
71457MI

HOMOLOGATED CATALYZED COLLECTORS
71457KZ

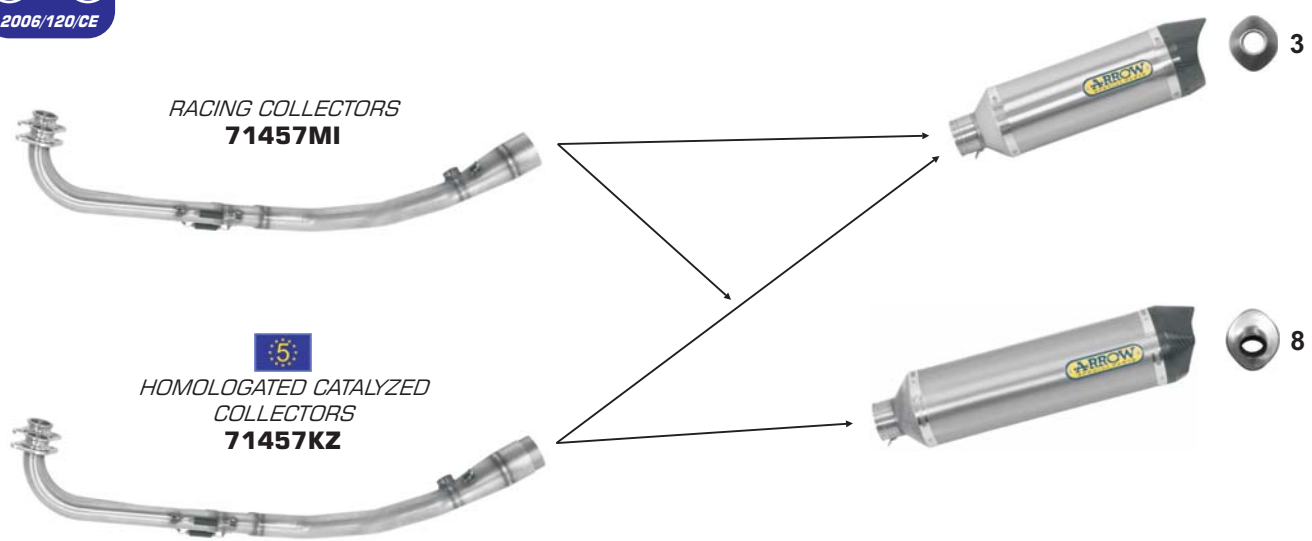

STREET THUNDER CARBON END CAP

	9 HOMOL.
TITANIUM	71753PK

RACE-TECH CARBON END CAP

	9 HOMOL.
TITANIUM	73507PK
ALUMINIUM	73507AK
ALUMINIUM "DARK"	73507AKN

Yamaha *FZ6 - FZ6 Fazer '04/06*

9e5 2006/120/CE

VEHICLE TYPE: **RJ07 var. I ver. I**

⚠ * **LINK PIPE ALSO FITS TO ORIGINAL SILENCERS**

3

NON CATALYZED LINK PIPE REPLACES CATALYZED ORIGINAL LINK PIPE
71272MI*

STREET THUNDER STEEL END CAP

	9 HOMOL.
TITANIUM	71681PO#
ALUMINIUM	71681AO#
ALUMINIUM "DARK"	71681AON#

⚠ # **SILENCERS ALSO FIT TO ORIGINAL CATALYZED LINK PIPE**

Yamaha *FZ6 S2 - FZ6 Fazer S2 '07/11*

9e5 2006/120/CE

VEHICLE TYPE: **RJ14 var. I ver. xi / xii / xiii**
RJ14 var. II ver. iv / v / vi / viii / ix / x

⚠ * **LINK PIPE ALSO FITS TO ORIGINAL SILENCERS**

3

NON CATALYZED LINK PIPE REPLACES CATALYZED ORIGINAL LINK PIPE
71371MI*

STREET THUNDER STEEL END CAP

	9 HOMOL.
TITANIUM	71681PO#
ALUMINIUM	71681AO#
ALUMINIUM "DARK"	71681AON#

⚠ # **SILENCERS ALSO FIT TO ORIGINAL CATALYZED LINK PIPE**

Yamaha *XJ6 - XJ6 Diversion '09/13*

VEHICLE TYPE: **RJ19 - RJ22**

9 e 5
2006/120/CE

RACING COLLECTORS
71421MI

HOMOLOGATED CATALYZED COLLECTORS
71421KZ

2

8

3

3

PRO-RACE STEEL END CAP

	9 HOMOL.
NICHROM	71659PRI

X-KONE CARBON END CAP

	9 HOMOL.
NICHROM	71761XKI

STREET THUNDER CARBON END CAP

	9 HOMOL.
TITANIUM	71761PK
ALUMINIUM	71761AK
ALUMINIUM "DARK"	71761AKN

STREET THUNDER STEEL END CAP

	9 HOMOL.
TITANIUM	71761PO
ALUMINIUM	71761AO
ALUMINIUM "DARK"	71761AON

Yamaha *XT 660 Z Ténéré '08/14*

1 : 2 LINK PIPES
FOR ORIGINAL COLLECTORS
72084PD

3

3

STREET THUNDER
CARBON END CAP

	RACING
TITANIUM	72011PK

STREET THUNDER
STEEL END CAP

	RACING
ALUMINIUM	72011AO

Yamaha *XT 660 R - XT 660 X '04/14*

VEHICLE TYPE: **DM01 var. I ver. V**

3

STREET THUNDER
STEEL END CAP

	HOMOL.
TITANIUM	72603PO
ALUMINIUM	72603AO

SILENCERS FOR ORIGINAL COLLECTORS

Yamaha *MT-03 '05/13*

VEHICLE TYPE: **RM02 var. I ver. i**
RM02 var. II ver. i

ROUND-SIL
STEEL END CAP

	HOMOL.
TITANIUM	71630PR
CARBON FIBRE	71630MC

SILENCERS FOR ORIGINAL COLLECTORS

Yamaha *YZF 600 R6 '03/04 - YZF 600 R6 '05*

VEHICLE TYPE: **RJ05**

VEHICLE TYPE: **RJ09 var. 5 ver. VI / VII / VIIII**

71244MI
LOW MOUNT LINK PIPE FOR ORIGINAL COLLECTORS
'03/04 VERSION

71314MI
LOW MOUNT LINK PIPE FOR ORIGINAL COLLECTORS
'05 VERSION

RACE-TECH
STEEL END CAP

	HOMOL.
TITANIUM	71661PO
CARBON FIBRE	71661MO
ALUMINIUM	71661AO

Yamaha YZF 600 R6 '06/07

9e5 2006/120/CE

VEHICLE TYPE: **RJ11 var. I ver. i / RJ11 var. I ver. ii**
RJ11 var. I ver. v / RJ11 var. I ver. vi

RACING COLLECTORS
71346MI

2

3

3

PRO-RACE STEEL END CAP

	HOMOL.
TITANIUM	71633PR

THUNDER STEEL CAP

	HOMOL.
TITANIUM	71701PO
ALUMINIUM	71701AO
ALUMINIUM "DARK"	71701AON

THUNDER CARBON CAP

	HOMOL.
TITANIUM	71701PK
ALUMINIUM	71701AK
ALUMINIUM "DARK"	71701AKN

2

PRO-RACE STEEL END CAP

	HOMOL.
TITANIUM	71628PR
NICHROM	71628PRI

3

THUNDER CARBON CAP

	HOMOL.
TITANIUM	71699PK
ALUMINIUM	71699AK
ALUMINIUM "DARK"	71699AKN

3

THUNDER STEEL CAP

	HOMOL.
TITANIUM	71699PO
ALUMINIUM	71699AO
ALUMINIUM "DARK"	71699AON

SILENCERS FOR ORIGINAL COLLECTORS

Yamaha YZF 600 R6 '08/11

9e5 2006/120/CE

VEHICLE TYPE: **RJ15 var. I ver. i / ii / iii / iv**

RACING COLLECTORS
71378MI

dB-KILLER FOR GP2 SILENCER
11009DB

2

GP2 SILENCER

	RACING
FULL TITANIUM	71002GP

2

PRO-RACE STEEL END CAP

	HOMOL.
TITANIUM	71628PR
NICHROM	71628PRI

3

THUNDER CARBON CAP

	HOMOL.
TITANIUM	71699PK
ALUMINIUM	71699AK
ALUMINIUM "DARK"	71699AKN

3

THUNDER STEEL CAP

	HOMOL.
TITANIUM	71699PO
ALUMINIUM	71699AO
ALUMINIUM "DARK"	71699AON

2

PRO-RACE STEEL END CAP

	HOMOL.
TITANIUM	71633PR

3

THUNDER STEEL CAP

	HOMOL.
TITANIUM	71701PO
ALUMINIUM	71701AO
ALUMINIUM "DARK"	71701AON

3

THUNDER CARBON CAP

	HOMOL.
TITANIUM	71701PK
ALUMINIUM	71701AK
ALUMINIUM "DARK"	71701AKN

FULL SYSTEM COMPETITION

THUNDER TITANIUM SILENCER
ø45/52mm. TITANIUM LINK PIPE
TITANIUM OR STEEL COLLECTORS

3

COMPETITION

	CARBON CAP
FULL TITANIUM	71073CKZ
STEEL COLLECT.	71072CKZ

SILENCERS FOR ORIGINAL COLLECTORS

Yamaha YZF 600 R6 '12/14

9 e 5 2006/120/CE

VEHICLE TYPE: **RJ15 var. I ver. vi / vii / viii / ix**

RACING COLLECTORS
71473MI

THUNDER CARBON CAP

3

	9 HOMOL.
TITANIUM	71699PK
ALUMINIUM	71699AK
ALUMINIUM "DARK"	71699AKN

THUNDER STEEL CAP

3

	9 HOMOL.
TITANIUM	71699PO
ALUMINIUM	71699AO
ALUMINIUM "DARK"	71699AON

PRO-RACE STEEL END CAP

2

	9 HOMOL.
TITANIUM	71628PR
NICHROM	71628PRI

GP2 SILENCER

2

	RACING
FULL TITANIUM	71002GP

SILENCERS FOR ORIGINAL COLLECTORS

dB-KILLER FOR GP2 SILENCER
11009DB

PRO-RACE STEEL END CAP

2

	9 HOMOL.
TITANIUM	71633PR

THUNDER STEEL CAP

3

	9 HOMOL.
TITANIUM	71701PO
ALUMINIUM	71701AO
ALUMINIUM "DARK"	71701AON

THUNDER CARBON CAP

3

	9 HOMOL.
TITANIUM	71701PK
ALUMINIUM	71701AK
ALUMINIUM "DARK"	71701AKN

FULL SYSTEM COMPETITION

RACE-TECH TITANIUM SILENCER ø45/52mm. TITANIUM LINK PIPE TITANIUM OR STEEL COLLECTORS

8

	CARBON CAP
FULL TITANIUM	71115CKZ
STEEL COLLECT.	71114CKZ

Yamaha *YZF 600 R6 '12/14*

VEHICLE TYPE: **RJ15 var. I ver. vi / vii / viii / ix**

8

FULL SYSTEM
HIGH VERSION
COMPETITION «EVO»

RACE-TECH TITANIUM SILENCER
WITH CARBON END CAP AND dB-KILLER
TITANIUM LINK PIPE ø50/60mm.
TITANIUM OR STEEL COLLECTORS

COMPETITION EVO

	CARBON CAP
FULL TITANIUM	**71130CKZ**
STEEL COLLECT.	**71129CKZ**

Yamaha *MT-09 '13/14*

9e5 2006/120/CE

VEHICLE TYPE: **RN29 var. A ver. 01 / 02 / 03 / 04 / 05**
RN29 var. A ver. 06 / 07 / 08 / 09

RACING COLLECTORS
71498MI

HOMOLOGATED CATALYST
11010KZ

8

3

3

X-KONE CARBON CAP

	9 HOMOL.
NICHROM	**71812XKI** *

THUNDER STEEL CAP

	9 HOMOL.
ALUMINIUM	**71812A0** *
ALUMINIUM "DARK"	**71812A0N** *

THUNDER CARBON CAP

	9 HOMOL.
TITANIUM	**71812PK** *
CARBON FIBRE	**71812MK** *
ALUMINIUM	**71812AK** *
ALUMINIUM "DARK"	**71812AKN** *

Yamaha *FZ8 - FZ8 Fazer '10/14*

VEHICLE TYPE: **RN25 var. I ver. i / ii / iii / v / vi / vii**

RACING COLLECTORS
71420MI

8

8

10

4

RACE-TECH STEEL END CAP

	HOMOL.
TITANIUM	71759PO *
CARBON FIBRE	71759MO *
ALUMINIUM	71759AO *
ALUMINIUM "DARK"	71759AON *

RACE-TECH CARBON END CAP

	HOMOL.
TITANIUM	71759PKK *
CARBON FIBRE	71759MKK *
ALUMINIUM	71759AK *
ALUMINIUM "DARK"	71759AKN *

PRO-RACING CARBON END CAP

	HOMOL.
NICHROM	71658RKI *

WORKS CARBON END CAP

	HOMOL.
TITANIUM	71760PK *

* **ALL SILENCERS ALSO FIT TO ORIGINAL COLLECTORS**

Yamaha *FZS 1000 Fazer '01/05*

VEHICLE TYPE: **RN06**

9 e 5 2006/120/CE

8

71220MI

LOW MOUNT LINK PIPE FOR ORIGINAL COLLECTORS

RACE-TECH STEEL END CAP

	9 HOMOL.
TITANIUM	71616PO
CARBON FIBRE	71616MO
ALUMINIUM	71616AO

Yamaha *FZ1 - FZ1 Fazer '06/14*

VEHICLE TYPE: **RN16 var. I ver. i / ii / iii / iv**
RJ14 var. II ver. i / ii / iii / iv / v / vi

RACING COLLECTORS
71344MI

LINK PIPE
71343MI*

7

7

MAXI RACE-TECH CARBON CAP

	9 HOMOL.
TITANIUM	71708PK
CARBON FIBRE	71708MK
ALUMINIUM	71708AK
ALUMINIUM "DARK"	71708AKN

MAXI RACE-TECH STEEL CAP

	9 HOMOL.
TITANIUM	71708PO
CARBON FIBRE	71708MO
ALUMINIUM	71708AO
ALUMINIUM "DARK"	71708AON

⚠ * **71343MI LINK PIPE ALSO FITS TO ORIGINAL SILENCERS**

Yamaha *YZF 1000 R1 '98/01*

VEHICLE TYPE: **RN01 / RN04**

9e5 2006/120/CE

HIGH/LOW MOUNT LINK PIPE
71186MI

RACING COLLECTORS
71226MI

71187MI
LOW MOUNT LINK PIPE FOR ORIGINAL COLLECTORS

8

RACE-TECH STEEL END CAP

	9 HOMOL.
TITANIUM	71604P0
CARBON FIBRE	71604M0
ALUMINIUM	71604A0

Yamaha *YZF 1000 R1 '02/03*

VEHICLE TYPE: **RN09**

LOW MOUNT LINK PIPE
71234MI

RACING COLLECTORS
71232MI

71231MI
LOW MOUNT LINK PIPE FOR ORIGINAL COLLECTORS

8

RACE-TECH STEEL END CAP

	9 HOMOL.
TITANIUM	71628P0
CARBON FIBRE	71628M0
ALUMINIUM	71628A0

Yamaha *YZF 1000 R1 '04/06*

9e5 2006/120/CE

VEHICLE TYPE: **RN12 var. I ver. I / II / III**
RN12 var. II ver. I

NON CATALYZED LINK PIPE
REPLACES CATALYZED
ORIGINAL LINK PIPE
71287MI#

RACING COLLECTORS
71288MI

STREET THUNDER
STEEL END CAP

	HOMOL.
TITANIUM	71687PO*
ALUMINIUM	71687AO*

 # 71287MI LINK PIPE ALSO FITS TO ORIGINAL COLLECTORS

*** SILENCERS ALSO FIT TO ORIGINAL CATALYZED LINK PIPE**

Yamaha *YZF 1000 R1 '07/08*

9e5 2006/120/CE

VEHICLE TYPE: **RN19 var. I ver. i / ii / iii**

RACING COLLECTORS
71364MI

CENTRAL LINK PIPE
71362MI#

LINK PIPE FOR
ORIGINAL COLLECTORS
71363MI

THUNDER STEEL CAP

	HOMOL.
TITANIUM	71719PO*
CARBON FIBRE	71719MO*
ALUMINIUM	71719AO*
ALUMINIUM "DARK"	71719AON*

THUNDER CARBON CAP

	HOMOL.
TITANIUM	71719PK*
CARBON FIBRE	71719MK*
ALUMINIUM	71719AK*
ALUMINIUM "DARK"	71719AKN*

 # 71362MI LINK PIPE COMBINATED WITH 71363MI LINK PIPE ELIMINATES ORIGINAL CATALYST AND FITS ALSO TO ORIGINAL SILENCERS

*** SILENCER ALSO FITS TO ORIGINAL CATALYZED LINK PIPE**

Yamaha *YZF 1000 R1 '09/14*

VEHICLE TYPE: **RN22 var. I ver. ii**

9e5 2006/120/CE

RACING COLLECTORS
71398MI

NON CATALYZED LINK PIPE
REPLACES CATALYZED
ORIGINAL LINK PIPE
71397MI#

8

RACE-TECH
CARBON END CAP

	9 HOMOL.
TITANIUM	71735PK*
CARBON FIBRE	71735MK*
ALUMINIUM	71735AO*

*** ALSO FIT TO ORIGINAL CATALYZED LINK PIPE**

 # LINK PIPE ALSO FITS TO ORIGINAL SILENCERS

REPLICA SBK FULL SYSTEM
COMPETITION «EVO»

RACE-TECH TITANIUM SILENCERS
WITH CARBON END CAP AND dB-KILLER
TITANIUM LINK PIPES
TITANIUM OR STAINLESS
STEEL COLLECTORS

COMPETITION "EVO"

	CARBON CAP
FULL TITANIUM	71090CKR§
STEEL COLLECT.	71091CKR§

8

FULL SYSTEM
COMPETITION

RACE-TECH TITANIUM SILENCERS
WITH CARBON END CAP AND dB-KILLER
TITANIUM LINK PIPES
TITANIUM OR STAINLESS
STEEL COLLECTORS

COMPETITION

	CARBON CAP
FULL TITANIUM	71080CKZ
STEEL COLLECT.	71079CKZ

§ NOT TO BE FITTED TO ORIGINAL PLATE HOLDER

Yamaha *XT 1200 Z SuperTenéré '10/13*

VEHICLE TYPE: **DP01 var. I ver. i / ii / iii**

9e5 2006/120/CE

RACING COLLECTORS
72095PD

7

MAXI RACE-TECH CARBON END CAP

	9 HOMOL.
TITANIUM	72614PK*
ALUMINIUM	72614AK*

* **SILENCERS ALSO FIT TO ORIGINAL COLLECTORS**

ENDURO 4T

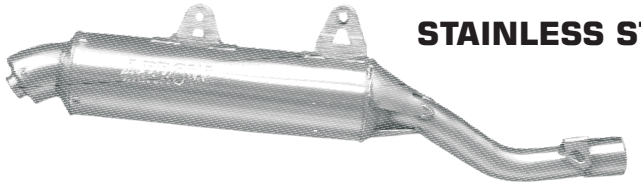

STAINLESS STEEL

ALUMINIUM

			HOMOL.	STAINLESS STEEL	HOMOL.	ALUMINIUM	HOMOL.	TITANIUM	RACING COLLECTORS
APRILIA		*Vehicle Type*		Exhaust		Exhaust		Exhaust	Collector
PEGASO 650 '05/09 (Dx+Sx)	[Page 4]	VD var.0 ver.00		---	E9	72608AO	E9	72608PO	---
HONDA		*Vehicle Type*		Exhaust		Exhaust		Exhaust	Collector
XR 125 L	[Page 37]	JD19 ver.1 ver.1		---	E9	52501AO*	E9	52501PO*	52001MI*
XR 125 R/SM	[Page 37]	125 ver.E - 125 ver.M		---	E9	52501AO*	E9	52501PO*	52001MI*
XL 125 Varadero '01/12	[Page 38]	JC32		---	E9	52503AO	E9	52503PO	---
XR 250 '96/05				---		72048AE		---	---
XR 400 R '96/05 - XR 440 '99/05				---		72048AE		---	---
XR 600 R '91/98				72006PD		72006AE		---	---
XL 600 V TRANSALP '87/97				72024PD		---		---	---
XL 650 V TRANSALP '00/07	[Page 58]	RD10 - RD11 var.1 ver.1		---	E9	72606AO	E9	72606PO	72068PD
XL 700 V TRANSALP '08/14	[Page 59]	RD13 var.1 ver.1		---	E9	72610AO	E9	72610PO	---
NX 650 DOMINATOR '87/93		RD02 B	E9	72602PD		---		---	---
NX 650 DOMINATOR '94/95		RD08	E9	72633PD		---		---	---
FMX 650 '05/08 (Dx+Sx)	[Page 58]	RD12 var.1 ver.1		---	E9	72607AO	E9	72607PO	72069PD
XRV 750 Africa Twin '90/92		RD04	E9	72604PD		---		---	---
XRV 750 Africa Twin '93/95		RD07	E9	72605PD	E9	---	E9	---	72093PD
XRV 750 Africa Twin '96/04		RD07 A	E9	72639PD		72039AE	E9	---	72093PD
XL 1000 Varadero '02/06 (Dx+Sx)	[Page 61]	SD02 var.1 ver.1		---	E9	72601AO	E9	72601PO	---
MALAGUTI		*Vehicle Type*		Exhaust		Exhaust		Exhaust	Collector
X3M Enduro / Motard '09/12		75 var. 01 ver. E4 / M4 / E5 / M5		---	E9	52504AO		---	52002MI

⚠ * **IT IS NECESSARY TO COMBINE COLLECTOR PART # AND SILENCER PART # (ASSEMBLY IS ONLY FOR FULL SYSTEM)**

ENDURO 4T

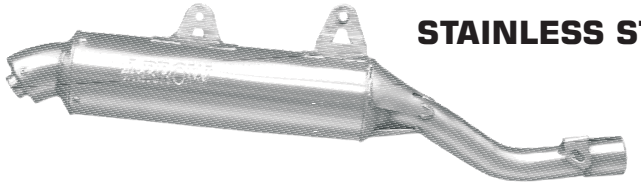

STAINLESS STEEL

ALUMINIUM

			HOMOL.	STAINLESS STEEL	HOMOL.	ALUMINIUM	HOMOL.	TITANIUM	RACING COLLECTORS
KAWASAKI		*Vehicle Type*		Exhaust		Exhaust		Exhaust	Collector
KLX 250 '09/14				---		72014TA		72014TK	---
KLX 650 - KLX 650 R '93/95				72020PD		---		---	---
SUZUKI		*Vehicle Type*		Exhaust		Exhaust		Exhaust	Collector
DR 350 S '90/95				72017PD		---		---	---
DL 650 V-Strom '04/14	[Page 118]	WVBU-1 1-1		---	⑨	72605AO*	⑨	72605PO*	71454MI*
YAMAHA		*Vehicle Type*		Exhaust		Exhaust		Exhaust	Collector
XT 125 R - XT 125 X '05/08		74 var.01 ver.B		*FULL SYSTEM* →	⑨	52502AO		---	---
WR 125 R / X '09/14	[Page 131]	DE07 var. I/II ver. i/ii		---	⑨	52505AO	⑨	52505PK	52003MI
WR 250 R/X '08/11	[Page 133]			---		72011TA		72011TT	72083PD
TT 600 - XT 600 Tenerè '86/92	59X / 3TB / 34L / 2KF / 1VJ / 3AJ / 55W		⑨	72608PD		---		---	---
XT 600 E '90/94				72011PD		---		---	---
XT 600 E '95/01				72034PD		72034AE		---	---
TT 600 R '99/01 - TT 600 E '00				72047PD		72047AE		---	---
XT 660 Z Tenerè '08/14 (Dx+Sx)	[Page 140]			---		72011AO*		72011PK*	72084PD#*
XT 660 R - XT 660 X '04/14 (Dx+Sx)	[Page 140]	DM01 var. I ver. V		---	⑨	72603AO	⑨	72603PO	---
XTZ 750 SuperTenerè '89/94		3LD	⑨	72610PD		72010AE		---	72091PD
XT 1200 Z SuperTenerè '10/14	[Page 151]	DP01 var. I ver. i / ii / iii		---	⑨	72614AK	⑨	72614PK	72095PD

* **IT IS NECESSARY TO COMBINE COLLECTOR PART # AND SILENCER PART # (ASSEMBLY IS ONLY FOR FULL SYSTEM)**

\# **1 : 2 LINK PIPE**

STREET 2T

ROUND SIL

MINI THUNDER

		NOT INTERCHANGEABLE WITH ORIGINAL ONE (unless otherwise noted)							
		HOMOL.	Exhaust	HOMOL.	Alum. sil. Round sil.	HOMOL.	Carbon sil. Round sil.	HOMOL.	Titanium sil. Round sil.	HOMOL.	Titanium sil. Mini Thunder
APRILIA	*Vehicle Type*		Part #		Part #		Part #		Part #		Part #
RS 50 EXTREMA '95/98	MM		51072SU*		51074SU*		51075SU*		---		---
RS 50 REPLICA '99/06			51099SU		51092SU		51093SU		---		---
RS 50 REPLICA '99/06	SE - SE var.0 ver.01	⑨	51506SU		---		---	⑨	51501SU		---
RS 50 '06/13	PL var.0 ver.00	⑨	51510SU		---		---	⑨	51511SU		---
RS4 50 '11/14	TK var.0 ver.00		51103SU		---		---		---	⑨	51602SU
TUONO 50 '03/06			51099SU		51092SU		51093SU		---		---
TUONO 50 '03/06	SE var.0 ver.00 - SE var.0 ver.01	⑨	51506SU		---		---	⑨	51501SU		---
RS 125 REPLICA '95/98			51073SU*		*Kevlar* →		51076SU*		---		---
RS 125 REPLICA '95/14	MPB1 - SF	⑨	51512SU		*Kevlar* →	⑨	51513SU		---		---
	PY var.A ver.00 - RD var.0 ver.00										
RS 125 '07/14	RD var.0 ver.00		51101SU*		---		---		---	⑨	51600SU*
TUONO 125 '04	SF var.D ver.00	⑨	51512SU		*Kevlar* →	⑨	51513SU		---		---
					Upper Sil. - KEVLAR - Lower sil.						
RS 250 CHALLENGE '95/02			51094SU		51095SU		51096SU		---		---
CAGIVA	*Vehicle Type*		Part #		Part #		Part #		Part #		Part #
MITO 125 '90			---		---		51060SU*		---		---
MITO 2 - RACING 125 EVOLUT. '91/93			51007SU*		---		51060SU*		---		---
MITO 125 '94/06			51097SU*		*Kevlar* →		51098SU*		---		---
MITO 125 '94/06	N3 ver. 00 var.AB - 8P ver.00 var.AB	⑨	51597SU	⑨	*Kevlar* →	⑨	51598SU	⑨	---		---
MITO SP 525 '08/14	N3 var.00 ver.AB		51102SU*		---		---		---	⑨	51601SU*
PLANET 125 '99/03	N3 ver.01 var.AA	⑨	51507SU	⑨	*Kevlar* →	⑨	51560SU	⑨	---		---
RAPTOR 125 '04/07	N3 ver.01 var.AB	⑨	51507SU	⑨	*Kevlar* →	⑨	51560SU	⑨	---		---

* **COMPONENT INTERCHANGEABLE WITH ORIGINAL ONE**

STREET 2T

ROUND SIL

MINI THUNDER

		NOT INTERCHANGEABLE WITH ORIGINAL ONE (unless otherwise noted)									
		HOMOL.	Exhaust	HOMOL.	Alum. sil. Round sil.	HOMOL.	Carbon sil. Round sil.	HOMOL.	Titanium sil. Round sil.	HOMOL.	Titanium sil. Mini Thunder
DERBI	***Vehicle Type***		**Part #**		**Part #**		**Part #**		**Part #**		**Part #**
GPR-R 50 '00/03	**GPRR**	9	**51500SU**		**---**		**---**	9	**51501SU**		**---**
GPR 50 RACING '04/08	**GR1 A1 A**	9	**51510SU**		**---**		**---**	9	**51511SU**		**---**
GPR 50 NUDE '04/07	**GR1 A1 B**	9	**51510SU**		**---**		**---**	9	**51511SU**		**---**
GPR 50 '10/14	**TK var.0 ver.00**		**51103SU**		**---**		**---**		**---**	9	**51602SU**
GPR 125 RACING '04/08	**GS var.1A ver.1A**	9	**51514SU**		**---**		**---**	9	**51515SU**		**---**
GPR 125 NUDE '04/07	**GS var.1A ver.1B**	9	**51514SU**		**---**		**---**	9	**51515SU**		**---**
HONDA	***Vehicle Type***		**Part #**		**Part #**		**Part #**		**Part #**		**Part #**
RAIDEN 125 '92/98			**51017SU**		**---**		**51063SU**		**---**		**---**
MBK	***Vehicle Type***		**Part #**		**Part #**		**Part #**		**Part #**		**Part #**
X-POWER 50 '01/03	**4YV**	9	**51502SU**		**---**		**---**	9	**51501SU**		**---**
X-POWER 50 '04	**RA ver.0 var.3 - RA03 - RA03 var.I ver.i**	9	**51509SU**		**---**		**---**	9	**51501SU**		**---**
X-POWER 50 '08/11			**51509SU**		**---**		**---**		**51501SU**		**---**
RIEJU	***Vehicle Type***		**Part #**		**Part #**		**Part #**		**Part #**		**Part #**
RS2 50 MATRIX '02/03	**LSJ11C10E014**	9	**51504SU**		**---**		**---**	9	**51503SU**		**---**
SUZUKI	***Vehicle Type***		**Part #**		**Part #**		**Part #**		**Part #**		**Part #**
					Upper Sil. - CARBON FIBRE - Lower sil.						
RGV 250 '91/95 GAMMA (pair)			**51019SU**		**51066SU**		**51067SU**		**---**		**---**
YAMAHA	***Vehicle Type***		**Part #**		**Part #**		**Part #**		**Part #**		**Part #**
TZR 50 '01/03	**4YV**	9	**51502SU**		**---**		**---**	9	**51501SU**		**---**
TZR 50 '04	**RA ver.0 var.3 - RA03 - RA03 var.I ver.i**	9	**51509SU**		**---**		**---**	9	**51501SU**		**---**
TZR 50 '08/13			**51509SU**		**---**		**---**		**51501SU**		**---**

ENDURO 2T

MINI THUNDER

ROUND SIL

		INTERCHANGEABLE WITH ORIGINAL ONE					NOT INTERCHANGEABLE WITH ORIGINAL ONE			
		HOMOL.	EXHAUST	ALUMINIUM SIL.	HOMOL.	TITANIUM SIL Mini Thunder	HOMOL.	EXHAUST	TITANIUM SIL. Round Sil	TITANIUM SIL. Mini Thunder
APRILIA	***Vehicle Type***		**Part #**	**Part #**		**Part #**		**Part #**	**Part #**	**Part #**
RX 50 '95/98	**MU**	E9	**52020SU**	**52022SU**		---		---	---	---
RX 50 '99/05 - MX 50 '02/05	**ST var.0 ver.00/var.0 ver.01**		---	---		---	E9	**52512SU**	**52513SU**	---
ST var.A ver.00/var.A ver.01/var.B ver.00/var.C ver.00/var.D ver.00										
RX 50 - SX 50 '06/14	**PV var.0 ver.00 - PV var.A ver.00**		**52037SU**	---	E9	**52604SU**		---	---	---
RX 125 '92/93			**52006SU**	**52016SU**		---		---	KEVLAR	---
MX 125 '04/08 (11 Kw)	**TZ var. 0 ver. 00**		---	---		---	E9	**52524SU**	**52525SU**	---
SX 125 / RX 125 '08/13 (11 Kw)	**RV var. 0 ver. 00**		**52036SU**	---	E9	**52602SU**		---	---	---
BETA	***Vehicle Type***		**Part #**	**Part #**		**Part #**		**Part #**	**Part #**	**Part #**
RR 50 Enduro/Motard '03/04	**BE - BE ver. 2**		---	---		---	E9	**52514SU**	**52515SU**	---
RR 50 ALU Enduro/Motard '04	**ART ver. 40 var. N**		---	---		---	E9	**52526SU**	**52527SU**	---
RR 50 Enduro '05/06	**BE var. 00 ver. 00 / 01 / 02**		---	---		---	E9	**52538SU**	**52515SU**	---
RR 50 ENDURO '09/11	**BE ver. 10 / 11**		**52041SU**	---	E9	**52606SU**		---	---	---
RR 50 MOTARD '10/11	**BE ver. 13**		**52042SU**	---	E9	**52607SU**		---	---	---
RR 50 ENDURO/MOTARD '12	**C2**		---	---		---		**52045SU**	--- E9	**52608SU**
DERBI	***Vehicle Type***		**Part #**	**Part #**		**Part #**		**Part #**	**Part #**	**Part #**
SENDA 50 '00/03	**SDR 0AB/0BB/1AB/1BB/1CB/1DB**		---	---		---	E9	**52504SU**	**52505SU**	---
SENDA 50 '04/09			---	---		---	E9	**52504SU**	**52505SU**	---
DRD EDITION 50 SM '05	**SR var. 3A ver. 1A**					*HIGH VERSION*	E9	**52504SU**	**52505SU**	---
						LOW VERSION	E9	**51516SU**	**51517SU**	---
DRD PRO 50 SM '06	**SA var. 2A ver. 1A**		---	---		---	E9	**52536SU**	**52537SU**	---
SENDA 50 SM Xrace / Xtreme '09/14	**SR2D1A**		**52037SU**	---	E9	**52604SU**		---	---	---
SENDA 50 R Xrace / Xtreme '09/14			**52037SU**	---	E9	**52604SU**		---	---	---
FANTIC	***Vehicle Type***		**Part #**	**Part #**		**Part #**		**Part #**	**Part #**	**Part #**
TZ 250 / 300 '10/11 **[Page 34]**			**52043SU**	---		**52044SU**	E9	---	---	---
GAS GAS	***Vehicle Type***		**Part #**	**Part #**		**Part #**		**Part #**	**Part #**	**Part #**
EC 200/250/300 '07/11 **[Page 34]**			**52043SU**	---		**52044SU**	E9	---	---	---

ENDURO 2T

MINI THUNDER

ROUND SIL

		INTERCHANGEABLE WITH ORIGINAL ONE				NOT INTERCHANGEABLE WITH ORIGINAL ONE			
		HOMOL.	EXHAUST	ALUMINIUM SIL.	HOMOL.	TITANIUM SIL Mini Thunder	HOMOL.	EXHAUST	TITANIUM SIL. Round Sil	TITANIUM SIL. Mini Thunder
HM	**Vehicle Type**		**Part #**	**Part #**		**Part #**		**Part #**	**Part #**	**Part #**
CRE 50 Baja - Six '99/06	**CRE 50 HM**		---	---		---	E9	**52516SU**	**52517SU**	---
CRE 50 Baja (steel frame)	**50S var. AM ver. E 50X var. AC / AL ver. E**		**52038SU**	---	E9	**52605SU**		---	---	---
Derapage 50 (steel frame)	**50S var. AM ver. M**		**52038SU**	---	E9	**52605SU**		---	---	---
CRE 50 Baja RR (aluminium frame)	**50X var. AC ver. E**		**52039SU**	---	E9	**52605SU**		---	---	---
Derapage 50 RR (aluminium frame)	**50X var. AC ver. M**		**52039SU**	---	E9	**52605SU**		---	---	---
CRE 50 Six Competition	**50X var. AL ver. E**		**52039SU**	---	E9	**52605SU**		---	---	---
Derapage Competition	**50X var. AL ver. M**		**52039SU**	---	E9	**52605SU**		---	---	---
CRE 50 Baja '12/13	**50R var. AC ver. E**		**52046SU**	---	E9	**52609SU**		---	---	---
Derapage 50 '12/13	**50R var. AC ver. M**		**52046SU**	---	E9	**52609SU**		---	---	---
HONDA	**Vehicle Type**		**Part #**	**Part #**		**Part #**		**Part #**	**Part #**	**Part #**
CRM 125 '89/98			**52009SU**	**52017SU**		---		---	---	---
HUSQVARNA	**Vehicle Type**		**Part #**	**Part #**		**Part #**		**Part #**	**Part #**	**Part #**
CR 65 '11/12			**55056CR**	---		**55057CR**		---	---	---
WRE 125 '05/08	**H2 var. 0 ver. AA**		---	---		---	E9	**52532SU**	---	**52600SU**
SM 125 '05/08	**H2 var. 0 ver. AB**		---	---		---	E9	**52532SU**	---	**52600SU**
WRE 125 '09/10			**52040SU**	---	E9	**52603SU**		---	---	---
KTM	**Vehicle Type**		**Part #**	**Part #**		**Part #**		**Part #**	**Part #**	**Part #**
SX 65 '10/11			**55058CR**	---		**55059CR**		---	---	---
EXC 125 '08/11 **[Page 94]**			**55048CR**	---		**55050CR**		---	---	---
SX 125 '08/11 **[Page 94]**			**55048CR**	---		**55049CR**		---	---	---
SX 150 '08/11 **[Page 94]**			**55053CR**	---		**55049CR**		---	---	---
EXC 250 '05/09 **[Page 95]**			**52035SU**	---		**55051CR**		---	---	---
EXC 300 '05/09 **[Page 95]**			**52035SU**	---		**55051CR**		---	---	---

ENDURO 2T

MINI THUNDER

ROUND SIL

		INTERCHANGEABLE WITH ORIGINAL ONE				NOT INTERCHANGEABLE WITH ORIGINAL ONE			
		HOMOL.	EXHAUST	ALUMINIUM SIL.	TITANIUM SIL Mini Thunder	HOMOL.	EXHAUST	TITANIUM SIL. Round Sil	TITANIUM SIL. Mini Thunder
MALAGUTI	***Vehicle Type***		**Part #**	**Part #**	**Part #**		**Part #**	**Part #**	**Part #**
XTM - XSM 50 '04	**68 var. K1 ver. A2**		---	---	---	9	**52520SU**	**52521SU**	---
MBK	***Vehicle Type***		**Part #**	**Part #**	**Part #**		**Part #**	**Part #**	**Part #**
X-LIMIT 50 '98/03	**5BK ver.1 / ver.2**		---	---	---	9	**52502SU**	**52503SU**	---
PEUGEOT	***Vehicle Type***		**Part #**	**Part #**	**Part #**		**Part #**	**Part #**	**Part #**
XPS 50 Supermotard '04	**DV0C**		---	---	---	9	**52522SU**	**52523SU**	---
XP6 SM 50 '06/07	**FU1CE2SM**		---	---	---	9	**52539SU**	**52540SU**	---
XPS TL 50 '06/07	**DV1CE2TL**		---	---	---	9	**52541SU**	**52542SU**	---
RIEJU	***Vehicle Type***		**Part #**	**Part #**	**Part #**		**Part #**	**Part #**	**Part #**
MRX 50 '02/03	**LJS11C107007**		---	---	---	9	**52506SU**	**52507SU**	---
YAMAHA	***Vehicle Type***		**Part #**	**Part #**	**Part #**		**Part #**	**Part #**	**Part #**
DT 50 R '98/03	**5BK**		---	---	---	9	**52502SU**	**52503SU**	---
DT 50 R '04	**68 var. K1 ver. A2**		---	---	---	9	**52520SU**	**52521SU**	---
DT 50 R '08/09			---	---	---		**52520SU**	**52521SU**	---
YZ 85 LW '06/11			**55054CR**	---	**55055CR**		---	---	---
DT 125 R / X '04/06	**DE06 var. 1 ver. 1 / 2** **DE06 var.2 ver.1 - DE06 var.I ver.II**		---	---	---	9	**52528SU**	---	**52601SU**

SCOOTER MAXI

 # RACING EXHAUST

dB-KILLER
RACING VERSION
11008DB

REFLEX 2.0
NICHROM SILENCER

APRILIA	***Vehicle Type***	***Hom.***	**Exhaust**	***Hom.***	**Homol. Collector**	**Racing collector**
SCARABEO 125 i.e. '09/11	**RB var. G ver. 00**	9	**53528STP***	5	**53028KZ***	**53028MI***
SPORT CITY 125 '05/08	**VB var. 0 ver. 00 / 03**	9	**53501STP***		**---**	**53001MI***
SCARABEO 200 i.e. '09/11	**RB var. H ver. 00**	9	**53528STP***	5	**53028KZ***	**53028MI***
SPORT CITY 200 '05/08	**VB var. A ver. 00**	9	**53501STP***		**---**	**53001MI***
ATLANTIC 250 '04/11	**SP var. B ver. 00**	9	**53512STP***		**---**	**53012MI***
SCARABEO 250 '06/11	**VR var. B ver. 00**	9	**53510STP***		**---**	**53010MI***
SPORT CITY 250 '06/08	**VB var. B ver. 00**	9	**53502STP***		**---**	**53002MI***
SCARABEO 300 S '10/13	**VR var. G ver. 00**	9	**53525STP***	5	**53025KZ***	**53025MI***
SPORT CITY 300 CUBE '08/13	**VB var. L ver. 00**	9	**53502STP***		**---**	**53002MI***
SR MAX 300 '11/13	**M35 var. 6 ver. 00**	9	**53521STP***	5	**53021KZ***	**53021MI***
SCARABEO 400 LIGHT '06/11		9	**73501A0***	5	**73001KZ***	**73001MI***
SCARABEO 500 '03/06		9	**73501A0***	5	**73001KZ***	**73001MI***
SCARABEO 500 ABS '04/08		9	**73501A0***	5	**73001KZ***	**73001MI***
SCARABEO 500 LIGHT '06/12	**VR var. B ver. 00**	9	**73501A0***	5	**73001KZ***	**73001MI***
GILERA	***Vehicle Type***		**Exhaust**		**Homol. Collector**	**Racing collector**
RUNNER VX 125 '01/05		9	**53536STP***		**---**	**53036MI***
RUNNER SP 125 '06/14	**M46 var. 3 ver. 00**	9	**53521STP***	5	**53035KZ***	**53035MI***
RUNNER 180 SP / FXR '98/02			**53006AE#**		**---**	**---**
RUNNER VXR 200 '02/05	**M24 var. 3 ver. 00**	9	**53536STP***		**---**	**53036MI***
RUNNER VXR 200 '06/07	**M46 var. 4 ver. 00**	9	**53521STP***	5	**53035KZ***	**53035MI***
NEXUS 300 '08/13	**M35 var.6 ver.00**	9	**53521STP***	5	**53021KZ***	**53021MI***
FUOCO 500 i.e. '08/11	**M61 var. 1 ver. 00**	9	**73503A0***	5	**73003KZ***	**73003MI***
HONDA	***Vehicle Type***		**Exhaust**		**Homol. Collector**	**Racing collector**
@ 125 '01/06	**JF07 - JF07 var.1 ver.1**	9	**53503STP***		**---**	**53003MI***
DYLAN 125 '02/06	**JF10 var.1 ver.1**	9	**53503STP***		**---**	**53003MI***
PANTHEON 125 4T '03/07	**JF12 var.1 ver.1**	9	**53511STP***		**---**	**53011MI***
PCX 125 '10/11	**JF28 ver. 1 ver. 1**	9	**53532STP***	5	**53032KZ***	**53032MI***
PCX 125 '12/13	**JF28 var.1 ver.1**	9	**53532STP***	5	**53038KZ***	**53038MI***

*** IT IS NECESSARY TO COMBINE COLLECTOR PART # AND SILENCER PART # (ASSEMBLY IS ONLY FOR FULL SYSTEM)**

SCOOTER MAXI

 # RACING EXHAUST

dB-KILLER
RACING VERSION
11008DB

REFLEX 2.0
NICHROM SILENCER

HONDA	***Vehicle Type***	***Hom.***	**Exhaust**	***Hom.***	**Homol. Collector**	**Racing collector**
PS 125i '06/12	**JF17 var.1 ver.1**	9	**53503STP***		**---**	**53003MI***
SH 125 '01/04	**JF09 - JF09 var.1 ver.1**	9	**53503STP***		**---**	**53003MI***
SH 125i '05/11	**JF14 var.1 ver.1**	9	**53503STP***		**---**	**53003MI***
SH 125i ABS '12/14	**JF41 var.1 / 2 / 3 / 4 ver.1**	9	**53539STP***	5	**53039KZ***	**53039MI***
PCX 150 '12/13	**KF12 ver. 1 ver. 1**	9	**53532STP***	5	**53038KZ***	**53038MI***
@ 150 '01/06	**KF03 - KF03 var.1 ver.1**	9	**53503STP***		**---**	**53003MI***
DYLAN 150 '02/06	**KF05 var.1 ver.1**	9	**53503STP***		**---**	**53003MI***
PANTHEON 150 4T '03/07	**KF06 var.1 ver.1**	9	**53511STP***		**---**	**53011MI***
PS 150i '06/12	**KF09 var.1 ver.1**	9	**53503STP***		**---**	**53003MI***
SH 150 '01/04	**KF04 var.1 ver.1**	9	**53503STP***		**---**	**53003MI***
SH 150i '05/11	**KF08 var.1 ver.1**	9	**53503STP***		**---**	**53003MI***
SH 150i ABS '12/14	**KF13 var.1 / 2 / 3 / 4 ver.1**	9	**53539STP***	5	**53039KZ***	**53039MI***
SH 300i '06/10	**NF02 var.1 ver.1**	9	**53504STP***		**---**	**53004MI***
KAWASAKI	***Vehicle Type***		**Exhaust**		**Homol. Collector**	**Racing collector**
J 300 '14		9	**53517STP***	5	**53017KZ***	**53017MI***
KEEWAY	***Vehicle Type***		**Exhaust**		**Homol. Collector**	**Racing collector**
OUTLOOK 150 '08	**T13 var. 1 ver. 1**	9	**53503STP***		**---**	**53003MI***
KYMCO	***Vehicle Type***		**Exhaust**		**Homol. Collector**	**Racing collector**
XCITING 250 '05/07	**T7 var.10 ver.00 - ver.01**	9	**53509STP***		**---**	**53009MI***
DOWNTOWN 300 '09/14	**V2 var. 00 ver. 00**	9	**53517STP***	5	**53017KZ***	**53017MI***
XCITING 300 i '08/11	**T7 var.00 / 10 / 20 ver. all**	9	**53509STP***		**---**	**53009MI***
XCITING 300 i R '08/14	**????**	9	**53509STP***		**---**	**53009MI***
MBK	***Vehicle Type***		**Exhaust**		**Homol. Collector**	**Racing collector**
CITY LINER 125 '08/10	**SE43 var. I ver. iii / iv**	9	**53520STP***		**---**	**53020MI***
SKYLINER 125 '08/10	**SE06 var.I ver.i / ii / iii / iv / v / vi / vii / viii**	9	**53515STP***	5	**53015KZ***	**53015MI***
KILIBRE 300 '04/06	**SH01 var.I ver.V - SH01 var.I ver.VI**	9	**53508STP***		**---**	**53008MI***

*** IT IS NECESSARY TO COMBINE COLLECTOR PART # AND SILENCER PART # (ASSEMBLY IS ONLY FOR FULL SYSTEM)**

SCOOTER MAXI

 # RACING EXHAUST

dB-KILLER
RACING VERSION
11008DB

REFLEX 2.0
NICHROM SILENCER

PEUGEOT	***Vehicle Type***	***Hom.***	**Exhaust**	***Hom.***	**Homol. Collector**	**Racing collector**
GEOPOLYS 300 '13/14	**N2 var. AG ver. AA**	9	**53505STP***	5	**53005KZ***	**53005MI***
METROPOLYS 400 '13/14 **[Page 110]**	**X1 var. AA ver. AA**	9	**53545STP***	5	**53045KZ***	**53045MI***
PIAGGIO	***Vehicle Type***		**Exhaust**		**Homol. Collector**	**Racing collector**
VESPA GT 200 '03/06	**M31 var. 2 ver. 00**	9	**53530STP***		**---**	**53031MI***
BEVERLY 250 '04/08	**M28 var. 5 ver. 00**	9	**53505STP***	5	**53005KZ***	**53005MI***
X8 250 '06/08	**M36 var. 4 ver. 00**	9	**53506STP***		**---**	**53006MI***
X9 250 Evolution '04/07	**M23 var. 7 ver. 00**	9	**53507STP***		**---**	**53007MI***
VESPA GTS 250 i.e. '05/06	**M45 var. 1 ver. 00**	9	**53530STP***		**---**	**53030MI***
BEVERLY 300 Tourer '09/11	**M28 var. A ver. 00**	9	**53505STP***	5	**53005KZ***	**53005MI***
BEVERLY 300 i.e. '10/14	**M69 var. 2 ver. 00**	9	**53529STP***	5	**53029KZ***	**53029MI***
CARNABY Cruiser 300 i.e. '09/13	**M60 var. 4 ver. 00**	9	**53526STP***	5	**53026KZ***	**53026MI***
MP3 300 Yourban '11/14	**M71 var. 2 ver. 00**	9	**53527STP***	5	**53027KZ***	**53027MI***
VESPA GTS 300 i.e. '08/14	**M45 var. 2 ver. 00**	9	**53530STP***		**---**	**53030MI***
BEVERLY 350 i.e. '12/14	**M69 var. 3 ver. 00**	9	**53533STP***	5	**53033KZ***	**53033MI***
X10 350 i.e. '12/14	**M76 var. 2 ver. 00**	9	**53533STP***	5	**53040KZ***	**53040MI***
MP3 400 RST '07/11	**M59 var. 1 ver. 00 / 01 / 02**	9	**73502AO***	5	**73002KZ***	**73002MI***
MP3 400 LT '07/11	**M64 var. 2 ver. 00**	9	**73502AO***	5	**73002KZ***	**73002MI***
BEVERLY 400 '06/10	**M34 var. 1 ver. 00**	9	**73501AO***	5	**73001KZ***	**73001MI***
BEVERLY 400 TOURER '08/11		9	**73501AO***	5	**73001KZ***	**73001MI***
BEVERLY 500 '03/08	**M34 var. 3 ver. 00**	9	**73501AO***	5	**73001KZ***	**73001MI***
BEVERLY 500 CRUISER '05/12	**M34 var. 5 ver. 00 / 01**	9	**73501AO***	5	**73001KZ***	**73001MI***
SUZUKI	***Vehicle Type***		**Exhaust**		**Homol. Collector**	**Racing collector**
BURGMAN 125 '07/13	**CC var. 1 ver. 1**	9	**53516STP***	5	**53044KZ***	**53044MI***
SIXTEEN 150 '09/14	**WVCP 1-1**	9	**53519STP***	5	**53019KZ***	**53019MI***
BURGMAN 200 '07/12	**CD 1-1 / 1-2 / 2-1**	9	**53516STP***	5	**53016KZ***	**53016MI***
BURGMAN 400 '07/13	**WVCG 1-1 / 1-2 / 2-1 / 2-4 / 2-5**	9	**53518STP***	5	**53018KZ***	**53018MI***

*** IT IS NECESSARY TO COMBINE COLLECTOR PART # AND SILENCER PART # (ASSEMBLY IS ONLY FOR FULL SYSTEM)**

SCOOTER MAXI

 # RACING EXHAUST

dB-KILLER
RACING VERSION
11008DB

REFLEX 2.0
NICHROM SILENCER

SYM	***Vehicle Type***	***Hom.***	**Exhaust**	***Hom.***	**Homol. Collector**	**Racing collector**
HD 200i EVO '10/14	**LH18W 3A 18A**	9	**53522STP***	5	**53022KZ***	**53022MI***
CITYCOM 300 i '07/14	**LH30W IIIA LH30W**	9	**53523STP***	5	**53023KZ***	**53023MI***
YAMAHA	***Vehicle Type***		**Exhaust**		**Homol. Collector**	**Racing collector**
MAJESTY 125 '08/11	**SE06 var.I ver.i / ii / iii / iv / v / vi / vii / viii**	9	**53515STP***	5	**53015KZ***	**53015MI***
X-CITY 125 '08/14	**SE43 var. I ver. i / ii**	9	**53520STP***		**---**	**53020MI***
X-MAX 125 '06/09	**SE32 var. I ver. i / ii**	9	**53520STP***		**---**	**53020MI***
XENTER 125/150 '11/13		9	**53540STP***	5	**53042KZ***	**53042MI***
X-CITY 250 '07/14	**SG19 var. I ver. i**	9	**53508STP***		**---**	**53013MI***
X-MAX 250 '09/13	**SG22 var.I ver.i**	9	**53508STP***		**---**	**53013MI***
XC 300 VERSITY '04/06	**SH01 var.I ver.V - SH01 var.I ver.VI**	9	**53508STP***		**---**	**53008MI***
MAJESTY 400 '08/14	**SH05 var.I ver.i/ii/iii/v/vi/vii/viii/ix/x/xii/xiii/xiv**	9	**53514STP***	5	**53014KZ***	**53014MI***

*** IT IS NECESSARY TO COMBINE COLLECTOR PART # AND SILENCER PART # (ASSEMBLY IS ONLY FOR FULL SYSTEM)**

EXTREME
TITANIUM SILENCER

EXTREME «CARBY»
CARBON FIBRE SILENCER

EXTREME «DARK»
ALUMINIUM SILENCER
BLACK ANODIZED

EXTREME «ALU»
ALUMINIUM SILENCER
TRANSPARENT ANODIZED

EXTREME «WHITE»
ALUMINIUM SILENCER
WITHE PAINTED

		HOMOL	EXTREME	EXTREME "CARBY"	EXTREME "DARK"	EXTREME "ALU"	EXTREME "WHITE"
APRILIA	***Vehicle Type***		**Part #**	**Part #**	**Part #**	**Part #**	**Part #**
RALLY '95/99 (air) 50 cc.	**MD**	⑨	**33512ET**	**33512EK**	**33512EN**	**33512ENA**	**33512ENB**
RALLY '96/99 (liquid) 50 cc.	**MD v. A0**	⑨	**33512ET**	**33512EK**	**33512EN**	**33512ENA**	**33512ENB**
SCARABEO 50 STREET '06/07 50 cc.	**TH var.G ver.05**	⑨	**33515ET**	**33515EK**	**33515EN**	**33515ENA**	**33515ENB**
SR '94/01 (air) 50 cc.	**LF**	⑨	**33512ET**	**33512EK**	**33512EN**	**33512ENA**	**33512ENB**
SR '94/01 (liquid) 50 cc.	**LC**	⑨	**33512ET**	**33512EK**	**33512EN**	**33512ENA**	**33512ENB**
SR WWW '97/01 50 cc.	**LYH0**	⑨	**33512ET**	**33512EK**	**33512EN**	**33512ENA**	**33512ENB**
SR STEALTH '96/01 50 cc.	**MZ L1**	⑨	**33512ET**	**33512EK**	**33512EN**	**33512ENA**	**33512ENB**
SR 50 KAT '00/03 50 cc.	**R1 ver. 1**	⑨	**33508ET**	**33508EK**	**33508EN**	**33508ENA**	**33508ENB**
SR DiTECH '02/03 50 cc.	**RL ver. D1**	⑨	**33509ET**	**33509EK**	**33509EN**	**33509ENA**	**33509ENB**
SR DiTECH '04 50 cc. (Piaggio engine)	**TE var.0 ver.00 - TE var.A ver.00**	⑨	**33515ET**	**33515EK**	**33515EN**	**33515ENA**	**33515ENB**
SR 50 R '05/09 50cc.	**VF var.D ver.00**	⑨	**33515ET**	**33515EK**	**33515EN**	**33515ENA**	**33515ENB**
SR 50 R Factory i.e. '05/07 50cc.	**VF var.B ver.00**	⑨	**33515ET**	**33515EK**	**33515EN**	**33515ENA**	**33515ENB**
SR 50 R Factory i.e. '08/09 50cc.			**33515ET**	**33515EK**	**33515EN**	**33515ENA**	**33515ENB**
SR 50 Street '07 50cc.	**TE var.A ver.00**	⑨	**33515ET**	**33515EK**	**33515EN**	**33515ENA**	**33515ENB**
SR 50 Street '08/09 50cc.			**33515ET**	**33515EK**	**33515EN**	**33515ENA**	**33515ENB**
GILERA	***Vehicle Type***		**Part #**	**Part #**	**Part #**	**Part #**	**Part #**
RUNNER '97/01 50 cc.			**33510ET**	**33510EK**	**33510EN**	**33510ENA**	**33510ENB**
RUNNER Kat '02/05 50 cc.	**C36 var. 4**	⑨	**33510ET**	**33510EK**	**33510EN**	**33510ENA**	**33510ENB**
RUNNER i.e. '02/05 50 cc.	**C36 var. 1**	⑨	**33510ET**	**33510EK**	**33510EN**	**33510ENA**	**33510ENB**
RUNNER SP '06/09 50 cc.			**33510ET**	**33510EK**	**33510EN**	**33510ENA**	**33510ENB**
RUNNER Pure Jet '06/09 50 cc.			**33510ET**	**33510EK**	**33510EN**	**33510ENA**	**33510ENB**
STALKER '97/02 50 cc.	**C13101**	⑨	**33504ET**	**33504EK**	**33504EN**	**33504ENA**	**33504ENB**
STALKER/STALKER Naked '03/09 50 cc.			**33504ET**	**33504EK**	**33504EN**	**33504ENA**	**33504ENB**
STORM '08/09 50 cc.			**33510ET**	**33510EK**	**33510EN**	**33510ENA**	**33510ENB**
TYPHOON '95/02 50 cc.	**TEC1T**	⑨	**33510ET**	**33510EK**	**33510EN**	**33510ENA**	**33510ENB**
HONDA	***Vehicle Type***		**Part #**	**Part #**	**Part #**	**Part #**	**Part #**
X8R-S '98/01 50 cc.	**AF49**	⑨	**33505ET**	**33505EK**	**33505EN**	**33505ENA**	**33505ENB**
X8R-X '98/01 50 cc.			**33505ET**	**33505EK**	**33505EN**	**33505ENA**	**33505ENB**

EXTREME
TITANIUM SILENCER

EXTREME «CARBY»
CARBON FIBRE SILENCER

EXTREME «DARK»
ALUMINIUM SILENCER
BLACK ANODIZED

EXTREME «ALU»
ALUMINIUM SILENCER
TRANSPARENT ANODIZED

EXTREME «WHITE
ALUMINIUM SILENCER
WITHE PAINTED

		HOMOL	EXTREME	EXTREME "CARBY"	EXTREME "DARK"	EXTREME "ALU"	EXTREME "WHITE"
KYMCO	***Vehicle Type***		**Part #**	**Part #**	**Part #**	**Part #**	**Part #**
AGILITY R16 '10/13 50 cc.		9	**33520ET**	**33520EK**	**33520EN**	**33520ENA**	**33520ENB**
BET & WIN '02/06 (liquid) 50 cc.		9	**33520ET**	**33520EK**	**33520EN**	**33520ENA**	**33520ENB**
DINK 2t '98/06 50 cc.		9	**33520ET**	**33520EK**	**33520EN**	**33520ENA**	**33520ENB**
PEOPLE 2t '07/13 50 cc.		9	**33520ET**	**33520EK**	**33520EN**	**33520ENA**	**33520ENB**
SUPER 8 2t '07/13 50 cc.		9	**33520ET**	**33520EK**	**33520EN**	**33520ENA**	**33520ENB**
SUPER 9 '03/06 50 cc.		9	**33520ET**	**33520EK**	**33520EN**	**33520ENA**	**33520ENB**
TOP BOY ON - OFF '97/02 50 cc.		9	**33520ET**	**33520EK**	**33520EN**	**33520ENA**	**33520ENB**
VITALITY 2t '03/08 50 cc.		9	**33520ET**	**33520EK**	**33520EN**	**33520ENA**	**33520ENB**
MALAGUTI	***Vehicle Type***		**Part #**	**Part #**	**Part #**	**Part #**	**Part #**
F10 JEN LINE '93/01 50 cc.	**48 var.02 ver.01 - ZJM39/D**	9	**33513ET**	**33513EK**	**33513EN**	**33513ENA**	**33513ENB**
F12 PHANTOM (air) '94/01 50 cc.	**ZJM40D**	9	**33514ET**	**33514EK**	**33514EN**	**33514ENA**	**33514ENB**
F12 PHANTOM (liquid) '94/01 50 cc.	**ZJM41**	9	**33514ET**	**33514EK**	**33514EN**	**33514ENA**	**33514ENB**
F12 DIGIT '02/06 50 cc.	**62 var.01 ver02 - 47 var.01 ver.02**	9	**33514ET**	**33514EK**	**33514EN**	**33514ENA**	**33514ENB**
F12 PHANTOM (air) '07/10 50 cc.	**83 var. 02 ver. A1 / B1**		**33517ET**	**33517EK**	**33517EN**	**33517ENA**	**33517ENB**
F12 PHANTOM (air) '07/10 50 cc.	**83 var. 02 ver. 01**		**33518ET**	**33518EK**	**33518EN**	**33518ENA**	**33518ENB**
F12 R Phantom (liquid) '07/10 50 cc.			**33514ET**	**33514EK**	**33514EN**	**33514ENA**	**33514ENB**
F15 FireFox '97/09 50 cc.			**33514ET**	**33514EK**	**33514EN**	**33514ENA**	**33514ENB**
MBK	***Vehicle Type***		**Part #**	**Part #**	**Part #**	**Part #**	**Part #**
BOOSTER R '92/06 50 cc.	**4PB**	9	**33511ET**	**33511EK**	**33511EN**	**33511ENA**	**33511ENB**
BOOSTER N.G. '98/06 50 cc.	**4TD**	9	**33511ET**	**33511EK**	**33511EN**	**33511ENA**	**33511ENB**
BOOSTER SPECIAL/SPIRIT '95/06 50 cc.	**SA06**	9	**33511ET**	**33511EK**	**33511EN**	**33511ENA**	**33511ENB**
NITRO 50 '97/06 50 cc.	**SA14 var. I ver. II / III**	9	**33503ET**	**33503EK**	**33503EN**	**33503ENA**	**33503ENB**
OVETTO '98/01 50 cc.	**SA15**	9	**33512ET**	**33512EK**	**33512EN**	**33512ENA**	**33512ENB**
PEUGEOT	***Vehicle Type***		**Part #**	**Part #**	**Part #**	**Part #**	**Part #**
LUDIX '04 50 cc.	**L1 AA AM - L1 AA AA - L1 AA BM - L1 AA BA - L1 AA CA**	9	**33516ET**	**33516EK**	**33516EN**	**33516ENA**	**33516ENB**
SPEEDFIGHT '96/01 50 cc.	**S1B v. B**	9	**33506ET**	**33506EK**	**33506EN**	**33506ENA**	**33506ENB**
X-FIGHT '02/03 50 cc.	**S1 var. BB ver.AA**	9	**33506ET**	**33506EK**	**33506EN**	**33506ENA**	**33506ENB**
TREKKER - TRK '99/04 50 cc.	**S1**	9	**33519ET**	**33519EK**	**33519EN**	**33519ENA**	**33519ENB**

EXTREME
TITANIUM SILENCER

EXTREME «CARBY»
CARBON FIBRE SILENCER

EXTREME «DARK»
ALUMINIUM SILENCER
BLACK ANODIZED

EXTREME «ALU»
ALUMINIUM SILENCER
TRANSPARENT ANODIZED

EXTREME «WHITE»
ALUMINIUM SILENCER
WITHE PAINTED

		HOMOL	EXTREME	EXTREME "CARBY"	EXTREME "DARK"	EXTREME "ALU"	EXTREME "WHITE"
PIAGGIO	***Vehicle Type***		**Part #**	**Part #**	**Part #**	**Part #**	**Part #**
NRG Mc2 '95/01 50 cc.	**C18000**	⑨	**33507ET**	**33507EK**	**33507EN**	**33507ENA**	**33507ENB**
NRG Mc3 DT Kat '02/04 50 cc.	**C32 var. 1**	⑨	**33510ET**	**33510EK**	**33510EN**	**33510ENA**	**33510ENB**
NRG Mc3 i.e. '02/04 50 cc.	**C32 var. 2**	⑨	**33510ET**	**33510EK**	**33510EN**	**33510ENA**	**33510ENB**
NRG POWER DD KAT '05/11 50 cc.	**C45 var. 1 ver. 00**	⑨	**33510ET**	**33510EK**	**33510EN**	**33510ENA**	**33510ENB**
NRG POWER PureJet '05/09 50 cc.	**C45 var. 2 ver. 00**	⑨	**33510ET**	**33510EK**	**33510EN**	**33510ENA**	**33510ENB**
TYPHOON '03/09 50 cc.			**33510ET**	**33510EK**	**33510EN**	**33510ENA**	**33510ENB**
TYPHOON '13 50 cc.	**C50 var. 1 ver. 00**	⑨	**33521ET**	**33521EK**	**33521EN**	**33521ENA**	**33521ENB**
ZIP '93/11 50 cc.		⑨	**33510ET**	**33510EK**	**33510EN**	**33510ENA**	**33510ENB**
SYM	***Vehicle Type***		**Part #**	**Part #**	**Part #**	**Part #**	**Part #**
JET 50 EURO X '03/11 50 cc.		⑨	**33520ET**	**33520EK**	**33520EN**	**33520ENA**	**33520ENB**
YAMAHA	***Vehicle Type***		**Part #**	**Part #**	**Part #**	**Part #**	**Part #**
AEROX '95/11 50 cc.	**5BR - SA14 var. I ver. II / III**	⑨	**33503ET**	**33503EK**	**33503EN**	**33503ENA**	**33503ENB**
BW'S ORIGINAL '02/06 50 cc.	**3WW - SA061 - SA064**	⑨	**33511ET**	**33511EK**	**33511EN**	**33511ENA**	**33511ENB**
BW'S ORIGINAL '07/09 50 cc.			**33511ET**	**33511EK**	**33511EN**	**33511ENA**	**33511ENB**
BW'S N.G. '02/06 50 cc.	**SA051**	⑨	**33511ET**	**33511EK**	**33511EN**	**33511ENA**	**33511ENB**
NEO'S '95/01 50 cc.			**33512ET**	**33512EK**	**33512EN**	**33512ENA**	**33512ENB**
SLIDER '01/06 50 cc.			**33511ET**	**33511EK**	**33511EN**	**33511ENA**	**33511ENB**

LIMITED SERIES
KEVLAR SILENCER

STREET
ALUMINIUM SILENCER
TRANSPARENT ANODIZED

STREET «WHITE»
ALUMINIUM SILENCER
WHITE PAINTED

STREET «BLACK»
ALUMINIUM SILENCER
BLACK PAINTED

		LIMITED SERIES	HOM.	STREET	HOM.	STREET "WHITE"	HOM.	STREET "BLACK"
APRILIA	***Vehicle Type***	**Part #**		**Part #**		**Part #**		**Part #**
RALLY '95/99 (air) 50 cc.	**MD**		●	**33639SE**	●	**33639SEB**	●	**33639SEN**
RALLY '96/99 (liquid) 50 cc.	**MD v. A0**		●	**33639SE**	●	**33639SEB**	●	**33639SEN**
SCARABEO 50 STREET '06/07 50 cc.	**TH var.G ver.05**		●	**33644SE**	●	**33644SEB**	●	**33644SEN**
SR '94/01 (air) 50 cc.	**LF**	**33007LS**	●	**33639SE**	●	**33639SEB**	●	**33639SEN**
SR '94/01 (liquid) 50 cc.	**LC**	**33007LS**	●	**33639SE**	●	**33639SEB**	●	**33639SEN**
SR WWW '97/01 50 cc.	**LYHO**		●	**33639SE**	●	**33639SEB**	●	**33639SEN**
SR STEALTH '96/01 50 cc.	**MZ L1**		●	**33639SE**	●	**33639SEB**	●	**33639SEN**
SR 50 KAT '00/03 50 cc.	**R1 ver. 1**		●	**33638SE**	●	**33638SEB**	●	**33638SEN**
SR DiTECH '02/03 50 cc.	**RL ver. D1**		●	**33640SE**	●	**33640SEB**	●	**33640SEN**
SR DiTECH '04 50 cc. (Piaggio engine)	**TE var.0 ver.00 - TE var.A ver.00**		●	**33644SE**	●	**33644SEB**	●	**33644SEN**
SR 50 R '05/09 50cc.	**VF var.D ver.00**		●	**33644SE**	●	**33644SEB**	●	**33644SEN**
SR 50 R Factory i.e. '05/07 50cc.	**VF var.B ver.00**		●	**33644SE**	●	**33644SEB**	●	**33644SEN**
SR 50 R Factory i.e. '08/09 50cc.				**33644SE**		**33644SEB**		**33644SEN**
SR 50 Street '07 50cc.	**TE var.A ver.00**		●	**33644SE**	●	**33644SEB**	●	**33644SEN**
SR 50 Street '08/09 50cc.				**33644SE**		**33644SEB**		**33644SEN**
CPI	***Vehicle Type***	**Part #**		**Part #**		**Part #**		**Part #**
OLIVER CITY '06	**JR var. 45 ver. 4**		●	**33646SE**	●	**33646SEB**	●	**33646SEN**
GILERA	***Vehicle Type***	**Part #**		**Part #**		**Part #**		**Part #**
RUNNER '97/01 50 cc.				**33637SE**		**33637SEB**		**33637SEN**
RUNNER Kat '02/05 50 cc.	**C36 var. 4**		●	**33637SE**	●	**33637SEB**	●	**33637SEN**
RUNNER i.e. '02/05 50 cc.	**C36 var. 1**		●	**33637SE**	●	**33637SEB**	●	**33637SEN**
RUNNER SP '06/09 50 cc.				**33637SE**		**33637SEB**		**33637SEN**
RUNNER Pure Jet '06/09 50 cc.				**33637SE**		**33637SEB**		**33637SEN**
STALKER '97/02 50 cc.	**C13101**		●	**33633SE**	●	**33633SEB**	●	**33633SEN**
STALKER/STALKER Naked '03/09 50 cc.				**33633SE**		**33633SEB**		**33633SEN**
STORM '08/09 50 cc.				**33637SE**		**33637SEB**		**33637SEN**
TYPHOON '95/02 50 cc.	**TEC1T**	**33003LS**	●	**33637SE**	●	**33637SEB**	●	**33637SEN**
HONDA	***Vehicle Type***	**Part #**		**Part #**		**Part #**		**Part #**
X8R-S '98/01 50 cc.	**AF49**		●	**33634SE**	●	**33634SEB**	●	**33634SEN**
X8R-X '98/01 50 cc.			●	**33634SE**	●	**33634SEB**	●	**33634SEN**

LIMITED SERIES
KEVLAR SILENCER

STREET
ALUMINIUM SILENCER
TRANSPARENT ANODIZED

STREET «WHITE»
ALUMINIUM SILENCER
WHITE PAINTED

STREET «BLACK»
ALUMINIUM SILENCER
BLACK PAINTED

		LIMITED SERIES	HOM.	STREET	HOM.	STREET "WHITE"	HOM.	STREET "BLACK"
KEEWAY	***Vehicle Type***	**Part #**		**Part #**		**Part #**		**Part #**
FOCUS '06 50 cc.	**TABM var. P ver. 1**			**33646SE**		**33646SEB**	●	**33646SEN**
KYMCO	***Vehicle Type***	**Part #**		**Part #**		**Part #**		**Part #**
AGILITY R16 '10/13 50 cc.			●	**33619SE**	●	**33619SEB**	●	**33619SEN**
BET & WIN '02/06 (liquid) 50 cc.			●	**33619SE**	●	**33619SEB**	●	**33619SEN**
DINK 2t '98/06 50 cc.			●	**33619SE**	●	**33619SEB**	●	**33619SEN**
PEOPLE 2t '07/13 50 cc.			●	**33619SE**	●	**33619SEB**	●	**33619SEN**
SUPER 8 2t '07/13 50 cc.			●	**33619SE**	●	**33619SEB**	●	**33619SEN**
SUPER 9 '03/06 50 cc.			●	**33619SE**	●	**33619SEB**	●	**33619SEN**
TOP BOY ON - OFF '97/02 50 cc.			●	**33619SE**	●	**33619SEB**	●	**33619SEN**
VITALITY 2t '03/08 50 cc.			●	**33619SE**	●	**33619SEB**	●	**33619SEN**
MALAGUTI	***Vehicle Type***	**Part #**		**Part #**		**Part #**		**Part #**
F10 JEN LINE '93/01 50 cc.	**48 var.02 ver.01 - ZJM39/D**		●	**33642SE**	●	**33642SEB**	●	**33642SEN**
F12 PHANTOM (air) '94/01 50 cc.	**ZJM40D**	**33007LS**	●	**33643SE**	●	**33643SEB**	●	**33643SEN**
F12 PHANTOM (liquid) '94/01 50 cc.	**ZJM41**	**33007LS**	●	**33643SE**	●	**33643SEB**	●	**33643SEN**
F12 DIGIT '02/06 50 cc.	**62 var.01 ver02 - 47 var.01 ver.02**		●	**33643SE**	●	**33643SEB**	●	**33643SEN**
F12 PHANTOM (air) '07/10 50 cc.	**83 var. 02 ver. A1 / B1**			**33256SE**		**33256SEB**		**33256SEN**
F12 PHANTOM (air) '07/10 50 cc.	**83 var. 02 ver. 01**			**33259SE**		**33259SEB**		**33259SEN**
F12 R Phantom (liquid) '07/10 50 cc.				**33643SE**		**33643SEB**		**33643SEN**
F15 FireFox '97/09 50 cc.				**33643SE**		**33643SEB**		**33643SEN**
MBK	***Vehicle Type***	**Part #**		**Part #**		**Part #**		**Part #**
BOOSTER R '92/06 50 cc.	**4PB**	**33006LS**	●	**33641SE**	●	**33641SEB**	●	**33641SEN**
BOOSTER N.G. '98/06 50 cc.	**4TD**	**33006LS**	●	**33641SE**	●	**33641SEB**	●	**33641SEN**
BOOSTER SPECIAL/SPIRIT '95/06 50 cc.	**SA06**	**33006LS**	●	**33641SE**	●	**33641SEB**	●	**33641SEN**
NITRO 50 '97/06 50 cc.	**SA14 var. I ver. II / III**		●	**33635SE**	●	**33635SEB**	●	**33635SEN**
OVETTO '98/01 50 cc.	**SA15**		●	**33639SE**	●	**33639SEB**	●	**33639SEN**
STUNT '01/06 50 cc.				**33641SE**		**33641SEB**		**33641SEN**
PEUGEOT	***Vehicle Type***	**Part #**		**Part #**		**Part #**		**Part #**
JET FORCE 50 C-TECH '09 50 cc.				**33262SE**		**33262SEB**		**33262SEN**
LUDIX '04 50 cc.	**L1 AA AM - L1 AA AA - L1 AA BM - L1 AA BA - L1 AA CA**		●	**33645SE**	●	**33645SEB**	●	**33645SEN**
SPEEDFIGHT '96/01 50 cc.	**S1B v. B**		●	**33631SE**	●	**33631SEB**	●	**33631SEN**
X-FIGHT '02/03 50 cc.	**S1 var. BB ver.AA**		●	**33631SE**	●	**33631SEB**	●	**33631SEN**

LIMITED SERIES
KEVLAR SILENCER

STREET
ALUMINIUM SILENCER
TRANSPARENT ANODIZED

STREET «WHITE»
ALUMINIUM SILENCER
WHITE PAINTED

STREET «BLACK»
ALUMINIUM SILENCER
BLACK PAINTED

		LIMITED SERIES	HOM.	STREET	HOM.	STREET "WHITE"	HOM.	STREET "BLACK"
PIAGGIO	***Vehicle Type***	**Part #**		**Part #**		**Part #**		**Part #**
NRG / NTT '95/01 50 cc.	**SAL1T**			**33633SE**		**33633SEB**		**33633SEN**
NRG Mc2 '95/01 50 cc.	**C18000**	**33003LS**	●	**33633SE**	●	**33633SEB**	●	**33633SEN**
NRG Mc3 DT Kat '02/04 50 cc.	**C32 var. 1**		●	**33637SE**	●	**33637SEB**	●	**33637SEN**
NRG Mc3 i.e. '02/04 50 cc.	**C32 var. 2**		●	**33637SE**	●	**33637SEB**	●	**33637SEN**
NRG POWER DD KAT '05/11 50 cc.	**C45 var. 1 ver. 00**		●	**33637SE**	●	**33637SEB**	●	**33637SEN**
NRG POWER PureJet '05/09 50 cc.	**C45 var. 2 ver. 00**		●	**33637SE**	●	**33637SEB**	●	**33637SEN**
TYPHOON '03/09 50 cc.				**33637SE**		**33637SEB**		**33637SEN**
TYPHOON '13 50 cc.	**C50 var. 1 ver. 00**		●	**33620SE**	●	**33620SEB**	●	**33620SEN**
ZIP '93/11 50 cc.				**33637SE**		**33637SEB**		**33637SEN**
SYM	***Vehicle Type***	**Part #**		**Part #**		**Part #**		**Part #**
JET 50 EURO X '03/11 50 cc.			●	**33619SE**	●	**33619SEB**	●	**33619SEN**
YAMAHA	***Vehicle Type***	**Part #**		**Part #**		**Part #**		**Part #**
AEROX '95/11 50 cc.	**5BR - SA14 var. I ver. II / III**		●	**33635SE**	●	**33635SEB**	●	**33635SEN**
BW'S ORIGINAL '02/06 50 cc.	**3WW - SA061 - SA064**		●	**33641SE**	●	**33641SEB**	●	**33641SEN**
BW'S ORIGINAL '07/09 50 cc.				**33641SE**		**33641SEB**		**33641SEN**
BW'S N.G. '02/06 50 cc.	**SA051**		●	**33641SE**	●	**33641SEB**	●	**33641SEN**
NEO'S '95/01 50 cc.				**33639SE**		**33639SEB**		**33639SEN**
SLIDER '01/06 50 cc.				**33641SE**		**33641SEB**		**33641SEN**

UNIVERSAL SILENCERS

	INNER DIAMETER	LENGHT	OUTER DIAMETER	PART #
ALUMINIUM SPARE ROUND SILENCERS	ø 20 mm.	250 mm.	70 mm.	**59001AR**
	ø 22 mm.	250 mm.	70 mm.	**59003AR**
	ø 24 mm.	270 mm.	70 mm.	**59005AR**
	ø 26 mm.	270 mm.	70 mm.	**59007AR**
	ø 28 mm.	335 mm.	70 mm.	**59009AR**
	ø 30 mm.	335 mm.	70 mm.	**59011AR**
ALUMINIUM SPARE OVAL SILENCERS	ø 20 mm.	230 mm.	81x64 mm.	**59002AR**
	ø 22 mm.	230 mm.	81x64 mm.	**59004AR**
	ø 24 mm.	255 mm.	81x64 mm.	**59006AR**
	ø 26 mm.	255 mm.	81x64 mm.	**59008AR**
	ø 28 mm.	320 mm.	81x64 mm.	**59010AR**
	ø 30 mm.	320 mm.	81x64 mm.	**59012AR**
CARBON SPARE ROUND SILENCERS	ø 22 mm.	290 mm.	70 mm.	**59013AR**
	ø 24 mm.	290 mm.	70 mm.	**59014AR**
	ø 26 mm.	290 mm.	70 mm.	**59015AR**

ACCESSORIES

PRODUCT	SPECIFICATIONS	Part #
MECHANICAL SILENCER ENDURO 4 T - P.D. REPLICA	*Specify vehicle model and year of production*	**12001PD**
MECHANICAL SILENCER OFF-ROAD THUNDER	*Specify vehicle model and year of production*	**12002PD**
SPARE SILENCER FOR SCOOTER	*Universal spare part for LIMITED SERIES exhaust*	**33005LS**
	Universal spare part for EXTREME exhaust	**33012ET**
	Universal spare part for EXTREME "CARBY" exhaust	**33012EK**
	Universal spare part for EXTREME "DARK" exhaust	**33012EN**
	Universal spare part for EXTREME "ALU" exhaust	**33012ENA**
	Universal spare part for EXTREME "WHITE" exhaust	**33012ENB**
	Universal spare part for STREET exhaust	**33012SE**
	Universal spare part for STREET "WHITE" exhaust	**33012SEB**
	Universal spare part for STREET "BLACK" exhaust	**33012SEN**
GLASS WOOL FOR SILENCER	*Universal for 2 Strokes and Scooter silencers*	**19001UN**
	Universal for ENDURO 4T silencers	**19003UN**
	Universal for STREET BIKES 4T silencers	**19005UN**
	Universal for silencers high temperatures (1200	**19006UN**
	Universal for RACING silencers	**19007UN**
	Universal for OFF-ROAD V2 silencers (L=450 mm.)	**19008UN**
	Universal for OFF-ROAD V2 silencers (L=400 mm.)	**19009UN**
	Universal for OFF-ROAD V2 silencers (L=350 mm.)	**19010UN**
	Universal specified for carbon fibre silencers (L=350 mm.)	**19011UN**
	Universal specified for carbon fibre silencers (L=400 mm.)	**19012UN**
	Universal specified for carbon fibre silencers (L=450 mm.)	**19013UN**
SEARING GASKETS FOR SCOOTER (5 pcs)	*Cylinder gaskets for Minarelli engines*	**13002UN**
	Universal silencer gaskets	**13003UN**

STRAIGHT END PIPE

DB-KILLER

BENDED END PIPE

INNER DIAMETER (A)	PIPE DIAMETER (B)	END PIPE	PART #
ø 45 mm.	*ø 26 mm.*	*BENDED*	**11002DB**
ø 45 mm.	*ø 32 mm.*	*STRAIGHT*	**11003DB**
ø 50 mm.	*ø 38 mm.*	*BENDED*	**11004DB**
ø 50 mm.	*ø 35 mm.*	*STRAIGHT*	**11005DB**
ø 56 mm.	*ø 42,4 mm.*	*BENDED*	**11006DB**
ø 58 mm.	*ø 42,4 mm.*	*BENDED*	**11007DB**

CLOTHING LINE and DISPLAYS

ARROW RACING CAP
CAP0010

KEY RING
(10 pcs)
11004AR

PASS HOLDER
11001AR

POLO ARROW (white - blue)

size S = **POL0032** *(white)* - **POL5032** *(blue)*
size M = **POL0033** *(white)* - **POL5033** *(blue)*
size L = **POL0034** *(white)* - **POL5034** *(blue)*
size XL = **POL0035** *(white)* - **POL5035** *(blue)*

ARROW DISPLAY
40cm (L) x 176cm (h)
ESP-AR1

ARROW DISPLAY
75cm (L) x 180 cm (h)
ESP-ARR

UMBRELLA
11002AR

ARROW SHIRT SHORT SLEEVE (white - blue)

size M = **CAM0033** *(white)* - **CAM5033** *(blue)*
size L = **CAM0034** *(white)* - **CAM5034** *(blue)*
size XL = **CAM0035** *(white)* - **CAM5035** *(blue)*
size XXL = **CAM0036** *(white)* - **CAM5036** *(blue)*

ARROW SPECIAL PARTS S.p.A.
Via Citernese 128/130 - 06016 San Giustino (PG) - ITALY
Tel. +39-075-861811 - Fax +39-075-8618137
www.arrow.it - info@arrow.it - facebook.com/ArrowSpecialParts